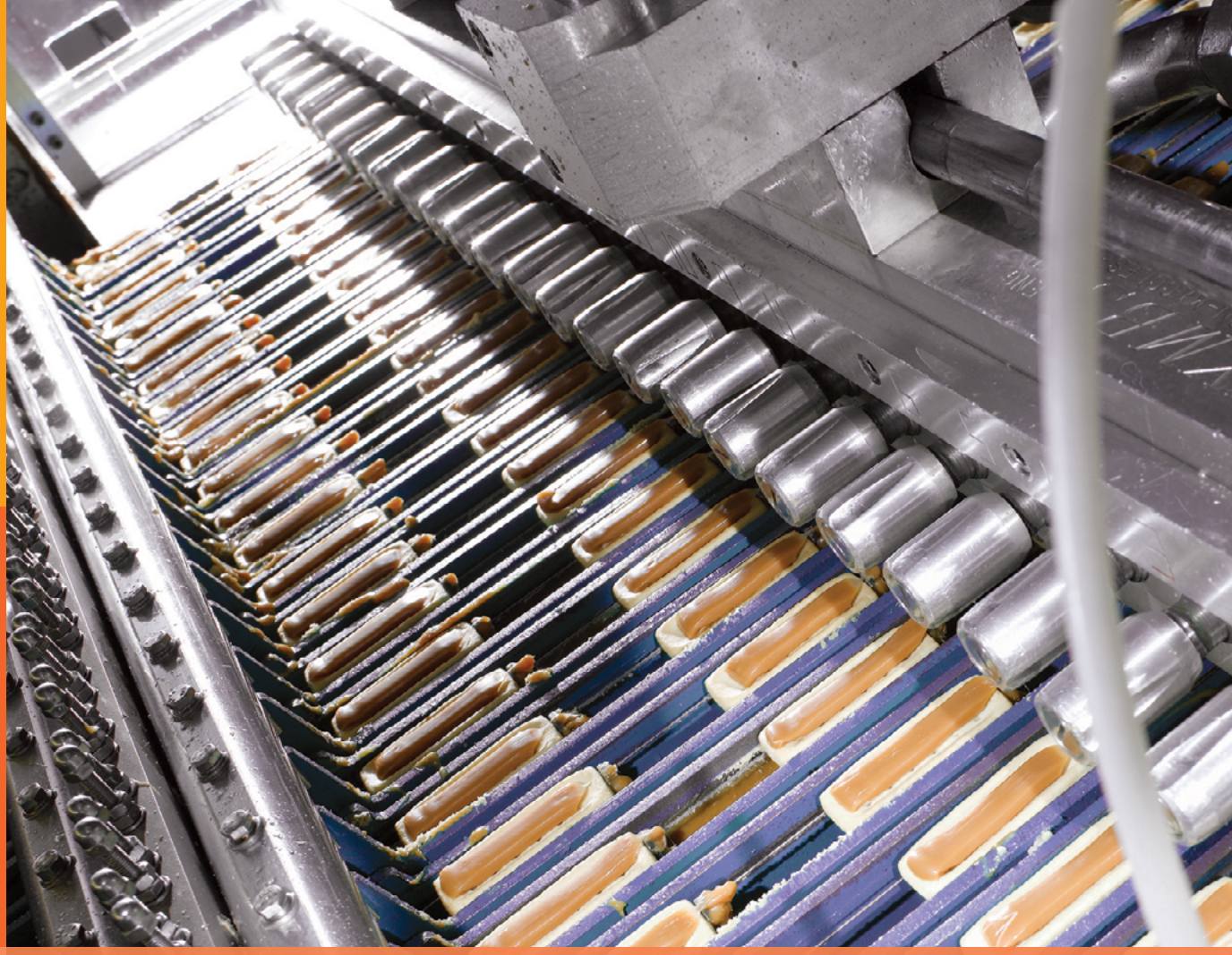

DYNABLOC Geared Servo Motors

Technical Catalogue

Low and standard backlash gearboxes for servo applications with Unimotor fm and Unimotor hd

LEROY-SOMER™

Nidec

All for dreams

Torques

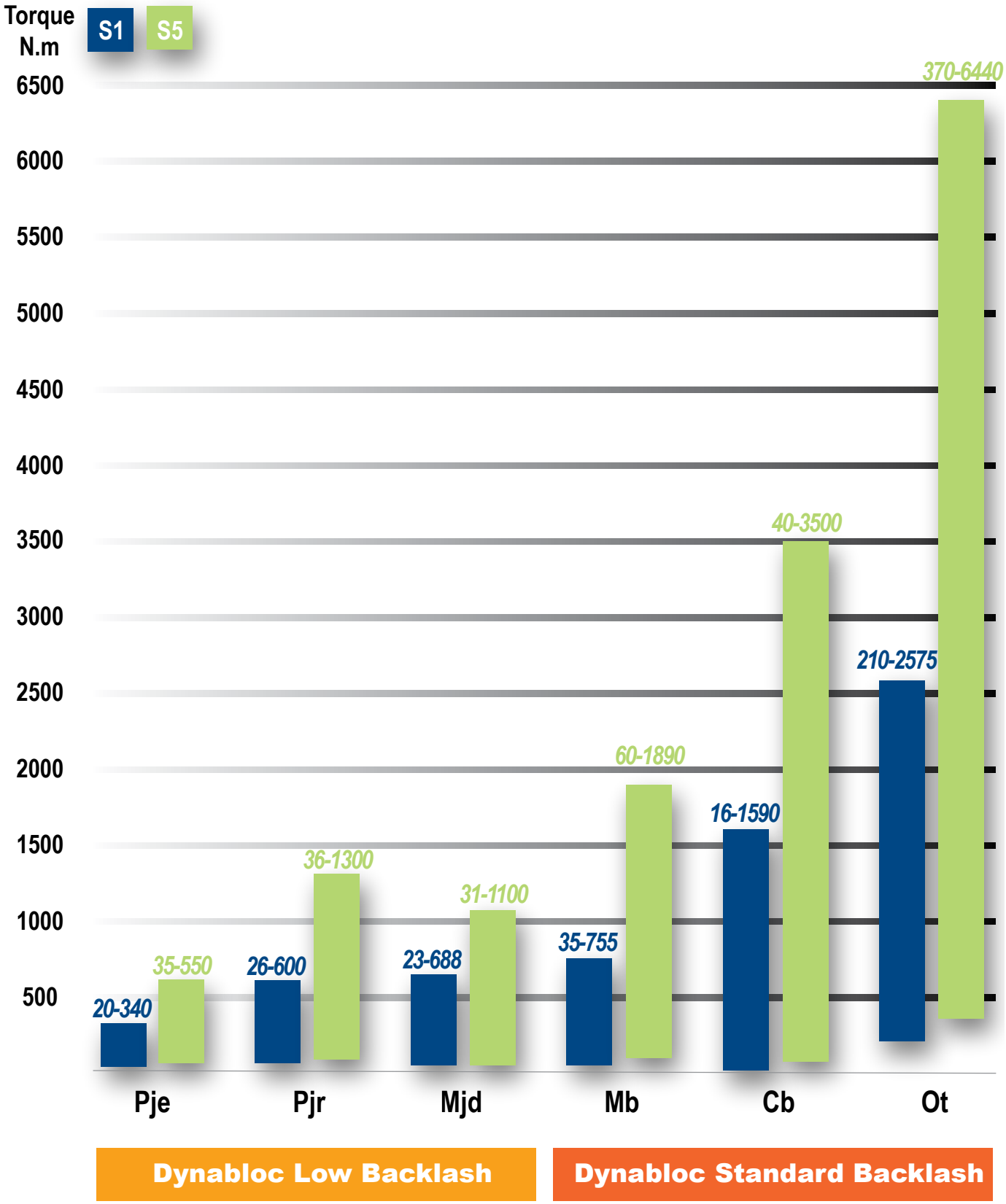
Torque
N.m
S1
S5
6500
6000
5500
5000
4500
4000
3500
3000
2500
2000
1500
1000
500
20-340
35-550
26-600
36-1300
23-688
31-1100
35-755
60-1890
16-1590
40-3500
210-2575
370-6440
Pje
Pjr
Mjd
Mb
Cb
Ot
Dynabloc Low Backlash
Dynabloc Standard Backlash

Contents

Flow Chart 4
Introduction 5

GENERAL INFORMATION
Servomotors technical data 6
Angular backlash of the gearboxes 6
Torsional stiffness 6
Finite reduction ratios 6

SELECTION CRITERIA
Necessary information for gearbox selection 7
Selection flow chart 8

SERVO GEARBOX SELECTION
Pje Dynabloc:
General 9
Technical characteristics 10
Mounting form - Operating position 11
Ordering code information 12
Pje 0641 - Pje 0642 13-14
Pje 0841 - Pje 0842 15-18
Pje 1181 - Pje 1182 19-20
Pje 1501 - Pje 1502 21-22
Dimensions Pje 23

Pjr Dynabloc:
General 24
Technical characteristics 25
Mounting form - Operating position 26
Ordering code information 27
Pjr 0601 - Pjr 0602 28-29
Pjr 0751 - Pjr 0752 30-33
Pjr 1001 - Pjr 1002 34-35
Pjr 1401 - Pjr 1402 36-37
Pjr 1801 - Pjr 1802 38
Dimensions Pjr 39

Mjd Dynabloc:
General 40
Technical characteristics 41
Mounting form - Operating position 42
Ordering code information 43
Mjd 0351 44
Mjd 0451 45
Mjd 0551 46
Mjd 0631 47
Mjd 0751 48
Mjd 0901 49
Mjd 1101 50
Dimensions Mjd 51-53

Cb Dynabloc:
General 54
Technical characteristics 55
Mounting form - Operating positions 56
Ordering code information 57
Cb 3031 - Cb 3032 - Cb 3131 58
Cb 3133 - Cb 3231 59
Cb 3233 60
Cb 3331 61
Cb 3333 62
Cb 3431 - Cb 3433 63
Dimensions Cb 64-69

Ot Dynabloc:
General 70
Technical characteristics 71
Mounting form - Operating positions 72
Ordering code information 73
Ot 3132 - Ot 3232 74
Ot 3233 75
Ot 3333 76
Ot 3433 77
Ot 3533 78
Dimensions Ot 79-82

Mb Dynabloc:
General 83
Technical characteristics 84
Mounting form - Operating positions 85
Ordering code information 86
Mb 4101 87
Mb 3101 88
Mb 4202 89
Mb 2201 90
Mb 2501 - Mb 2601 91
Dimensions Mb 92-97

Leroy-Somer reserves the right to modify the design, technical specifications and dimensions of the products shown in the document. The description cannot in any way be considered contractual.

Flow Chart

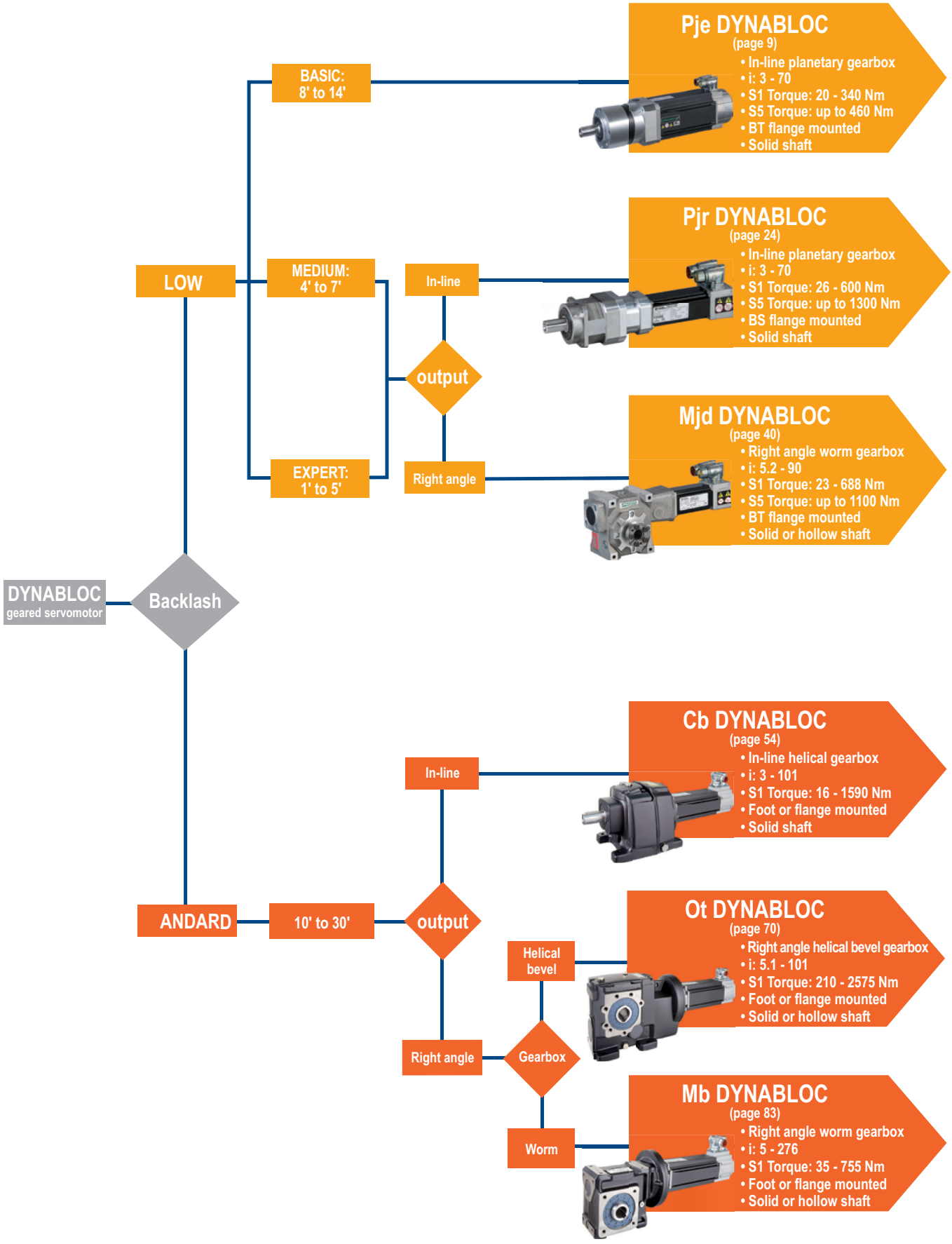
DYNABLOC
geared servomotor
Backlash
LOW
ANDARD
BASIC:
8' to 14'
MEDIUM:
4' to 7'
EXPERT:
1' to 5'
10' to 30'
In-line
output
Right angle
In-line
output
Helical bevel
Gearbox
Right angle
Worm
Pje DYNABLOC
(page 9)
• In-line planetary gearbox
• i: 3 - 70
• S1 Torque: 20 - 340 Nm
• S5 Torque: up to 460 Nm
• BT flange mounted
• Solid shaft
Pjr DYNABLOC
(page 24)
• In-line planetary gearbox
• i: 3 - 70
• S1 Torque: 26 - 600 Nm
• S5 Torque: up to 1300 Nm
• BS flange mounted
• Solid shaft
Mjd DYNABLOC
(page 40)
• Right angle worm gearbox
• i: 5.2 - 90
• S1 Torque: 23 - 688 Nm
• S5 Torque: up to 1100 Nm
• BT flange mounted
• Solid or hollow shaft
Cb DYNABLOC
(page 54)
• In-line helical gearbox
• i: 3 - 101
• S1 Torque: 16 - 1590 Nm
• Foot or flange mounted
• Solid shaft
Ot DYNABLOC
(page 70)
• Right angle helical bevel gearbox
• i: 5.1 - 101
• S1 Torque: 210 - 2575 Nm
• Foot or flange mounted
• Solid or hollow shaft
Mb DYNABLOC
(page 83)
• Right angle worm gearbox
• i: 5 - 276
• S1 Torque: 35 - 755 Nm
• Foot or flange mounted
• Solid or hollow shaft

Introduction

The Dynabloc geared servo motor range from Leroy-Somer combines reduced-backlash Dynabloc gearboxes with high-performance Unimotor servo motors to provide optimized solutions for all servo applications. There are two families of Dynabloc gearbox: Dynabloc Low Backlash and Dynabloc Standard Backlash.

LOW BACKLASH

Dynabloc Low Backlash

Planetary Gearboxes

Pje Dynabloc

Pjr Dynabloc

Worm Gearbox

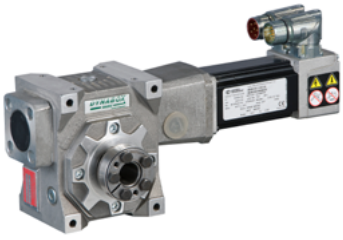

Mjd Dynabloc

STD BACKLASH

Dynabloc Standard Backlash

Helical Gearbox

Cb Dynabloc

Helical Bevel Gearbox

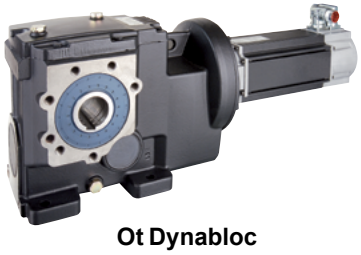

Ot Dynabloc

Worm Gearbox

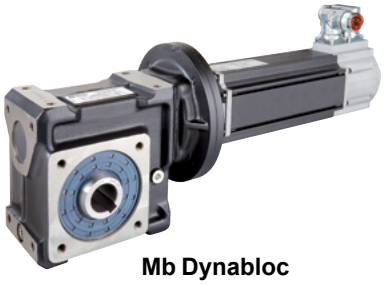

Mb Dynabloc

Unimotor fm and hd Servo Motors

Flexible Motor
Continuous Duty Applications

Unimotor fm

High Dynamic Motor
Pulse Duty Applications

Unimotor hd

Overview of Dynabloc-Unimotor combinations

Motor type	Dynabloc Low Backlash			Dynabloc Standard Backlash		
	Pje	Pjr	Mjd	Cb	Ot	Mb
Unimotor fm	✓	✓	✓	✓	✓	✓
Unimotor hd	✓	✓	✓	-	-	✓ Mb41, Mb42 only

General information
Servomotors technical data

Temperature rise class F
Ambiant temperature 40°C
Power supply 380-480 V AC (230 V on request)
Nominal speed 2000 to 6000 rpm

Servomotor type		Stall torque	Nominal torque (3000 rpm)	Peak torque*	Standard inertia	High inertia	Brake		Supply
							Static torque	Inertia	
		N.m	N.m	N.m	10^{-4} kg.m^2	10^{-4} kg.m^2	N.m	10^{-4} kg.m^2	V (Vdc)
Unimotor fm	075 U3 B	2.7	2,3	8.0	1.22	1.61	2.2	0.07	24
	095 U3 B	4.5	4,1	13.5	2.60	4.5	12.2	0.39	24
	095 U3 D	7.9	6,9	23.7	4.83	6.7	12.2	0.39	24
	115 U3 D	13.7	11,2	41.0	12.5	17.1	20	0.24	24
	142 U3 E	25.0	18,2	75.0	36.9	49.8	20	0.30	24
	190 U3 D	44.5	33,2	133.5	86.8	125.3	42	0.39	24
Unimotor hd	055 UD A	0.72	0.70	2.88	0.14	-	1.8	0.03	24
	055 UD B	1.18	1.05	4.72	0.25	-	1.8	0.03	24
	055 UD C	1.65	1.48	6.60	0.36	-	1.8	0.03	24
	067 UD B	2.55	2.45	7.65	0.53	-	4	0.073	24
	067 UD C	3.7	3.50	11.1	0.75	-	4	0.073	24
	089 UD B	5.5	4.85	16.5	1.61	-	10	0.115	24
	089 UD C	8.0	6.90	24.0	2.34	-	10	0.115	24
	115 UD C	14.6	10.5	43.8	6.39	-	20	0.21	24
	115 UD D	18.8	13.6	56.4	8.38	-	20	0.21	24
	142 UD C	25.0	18.4	74.9	17.0	-	42	1.85	24
	142 UD E	38.0	23.0	114	27.2	-	42	1.85	24
	190 UD C	52.0	42.5**	156	54.6	-	67	4.95	24

** The peak torque can be limited by put current of the drive. ** 2000 rpm*

For all the safety instructions, general information and technical characteristics relating to the servo motors Unimotor fm and hd, refer to the Servo Drives and Motors catalogue ref: P.N. 0702-0007-09 07/16.

Angular backlash of the gearboxes

The backlash in the gearbox output shaft varies from 1 to 30 arcmin depending on the chosen gearbox type and backlash class. The possible selections are as follows:

Backlash class		Low speed shaft orientation			
		Axial		Perpendicular	
		Type	Backlash	Type	Backlash
Low Backlash	BASIC	**Pje** i = 3 - 10	< 8 - < 10'	**Mjd**	< 10'
		Pje i = 12 - 100	< 12 - < 14'		
	MEDIUM	**Pjr** i = 3 - 10	< 4 - < 6'		< 5'
		Pjr i = 12 - 100	< 6 - < 7'		
	EXPERT	**Pjr** i = 3 - 10	< 2 - < 4'		< 1'
		Pjr i = 12 - 100	< 4 - < 5'		
Standard Backlash		**Cb**	10 - 30'	**Ot**	10 - 30'
				Mb	10 - 30'

The exact backlash for each gearbox type and ratio i is specified in § Technical characteristics.

Torsional stiffness

The torsional stiffness is the characteristic which indicates the torque in N.m which must be applied to the servo gearbox to deform it by an angle of one arcmin. The stiffness is indicated in N.m/arcmin.
In the event of very severe applications combined with a high inertia of the load, it is advisable to choose a servo gearbox with high torsional stiffness in order to guarantee the stability of the servomotor at dynamic operation.
The proposed planetary gearboxes Pje and Pjr or worm gearboxes Mjd are most suitable under these conditions.

Finite reduction ratios

In the Dynabloc range, all reduction ratios are finite numbers or integers to enable a precise calculation of the positioning, without rounding (Exceptions: Dynabloc Cb and Ot).

Selection criteria
Necessary information for gearbox selection

- Type of application
- Weight of load to be moved
- Duty cycle, see diagram below (example)
- Linear speed
  --> Calculate the speed n_2 at the gearbox output
- Accuracy of positioning
  --> Calculate the angular backlash of the gearbox
- Resistive and acceleration torque at output
- Radial and axial load on output shaft
- Ambient temperature
- Height of installation

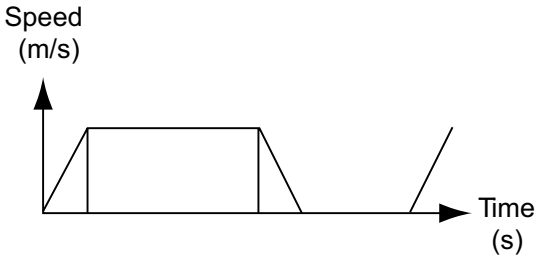

Duty cycle diagram

Abbreviations

Definitions	Symbols
Maximum permissible gearbox output torque for S1 Duty in N.m (optimum case)	$M_{Red\text{-}S1\ max}$
Motor nominal torque in N.m	$M_{n\ mot}$
Motor peak torque in N.m	$M_{peak\ mot}$
Gearbox nominal output torque in N.m	$M_{n\ red}$
Acceleration torque at gearbox output in N.m	$M_{acc\ red}$
Requested acceleration torque in N.m	M_{acc}
Resistive torque of the load at gearbox output in N.m	M_{res}
Duty factor for S1 Duty	k_{S1}
Duty factor at acceleration	k_{acc}
Motor inertia in kg.m^2	J_{mot}
Gearbox inertia at input in kg.m^2	J_{red}
Inertia of load, in kg.m^2, at gearbox input	J_{ch}
Exact gearbox ratio	i_{exact}
Output speed in rpm	n_2
Maximum permissible radial load on output shaft in N	F_r
Maximum permissible axial load on output shaft in N	F_a

Selection criteria
Selection flow chart

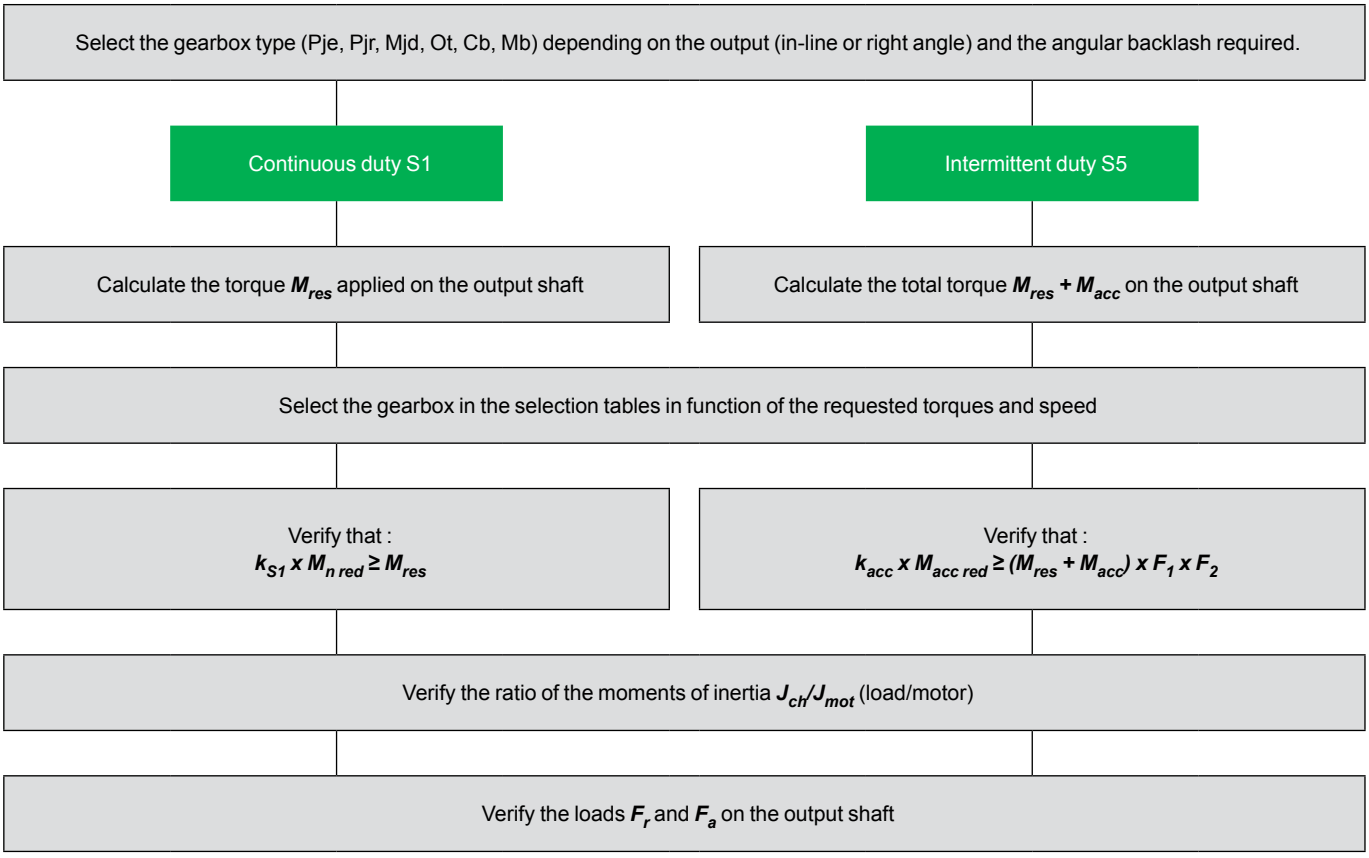

Correction factors

Factor **F1**					
Running time per cycle	10 %	30 %	50 %	70 %	90 %
Corrective factor F1	0.7	0.85	1	1.11	1.2

Factor **F2**				
Number of starts per hour	1000-2000	2000-3000	3000-5000	5000-10000
Corrective factor F2	1 - 1.3	1.3 - 1.5	1.5 - 1.7	1.7 - 1.9

Indicative values for the ratio of inertias J_{ch}/J_{mot}

Acceleration time	Ratio J_{ch}/J_{mot}
0.1 s	≤ 3
0.2 s	≤ 5
0.5 s	≤ 8
1.0 s	≤ 15

Pje Dynabloc Servo gearbox
General

Pje Dynabloc

• An economical reduced backlash planetary solution

- **Low backlash**
- **High torsional stiffness**
- **Lightweight and compact**
- **Unimotor fm or hd**

Pje Dynabloc servo gearboxes are designed to reduce the speed and increase the torque of servo motors and to optimize the ratio of inertia between the driven load and the motor.

Pje Dynabloc gearboxes are the perfect economical solution for applications requiring low backlash and high torsional stiffness. Lightweight and compact, the gearboxes can be easily integrated into machines. Maintenance-free, they are supplied lubricated and are mulitpositional.

Pje Dynabloc gearboxes are available with Unimotor fm motors for continuous duty applications with high inertia loads or Unimotor hd motors for pulse duty applications requiring high dynamics. Standard motor speed is 3000 rpm, a motor speed of 6000 rpm is also available for the smallest sizes.

Description	
Range	4 sizes from 0641 to 1502
Nominal torque	20 - 340 N.m
Max acceleration torque	Up to 460 N.m
Gearbox ratio	1-stage: ratios from 3 to 10 2-stage: ratios from 12 to 70
Backlash	BASIC • 1-stage: 8 to 10' • 2-stage: 12 to 14'
Lubrication	Life lubricated, multiposition
Efficiency	1-stage: 94 % 2-stage: 92 %
Output shaft	Solid shaft with key
Unimotor hd Unimotor fm	Nominal speed 2000 rpm to 6000 rpm depending on size Connectors rotatable by 90° Incremental or absolute encoder Motor with or without brake Universal mounting with servo coupling
Finish	Painted (RAL 9005 black) and unpainted aluminium

LOW BACKLASH

Pje Dynabloc Servo gearbox
Technical characteristics

Gearbox type	Exact ratio	Efficiency	Torsional stiffness	Angular backlash			Max. radial load F_r at E/2	Max. axial load F_a
				arcmin				
			N.m/arcmin	BASIC	MEDIUM	EXPERT	N	N
Pje 0641	3	0.94	2.4	< 10	-	-	450	500
	4		2.4					
	5		2.4					
	7		1.7					
	10		1.3					
Pje 0642	12	0.92	2.4	< 14	-	-	450	500
	16		2.4					
	20		2.4					
	35		2.4					
	50		2.4					
Pje 0841	3	0.94	2.4	< 10	-	-	1300	500
	4		2.4					
	5		2.4					
	7		1.7					
	10		1.3					
Pje 0842	12	0.92	2.4	< 14	-	-	1300	500
	16		2.4					
	20		2.4					
	35		2.4					
	50		2.4					
	70		2.4					
Pje 1181	3	0.94	2.4	< 8	-	-	2600	1000
	4		2.4					
	5		2.4					
	7		1.7					
	10		1.3					
Pje 1182	12	0.92	2.4	< 12	-	-	2600	1000
	16		2.4					
	20		2.4					
	35		2.4					
Pje 1501	3	0.94	2.4	< 8	-	-	6500	6000
	4		2.4					
	5		2.4					
	7		1.7					
	10		1.3					
Pje 1502	12	0.92	2.4	< 12	-	-	6500	6000
	16		2.4					
	20		2.4					
	35		2.4					

Pje Dynabloc Servo gearbox
Mounting form - Operating position

Mounting form

Mounting with flange with tapped holes **BT**

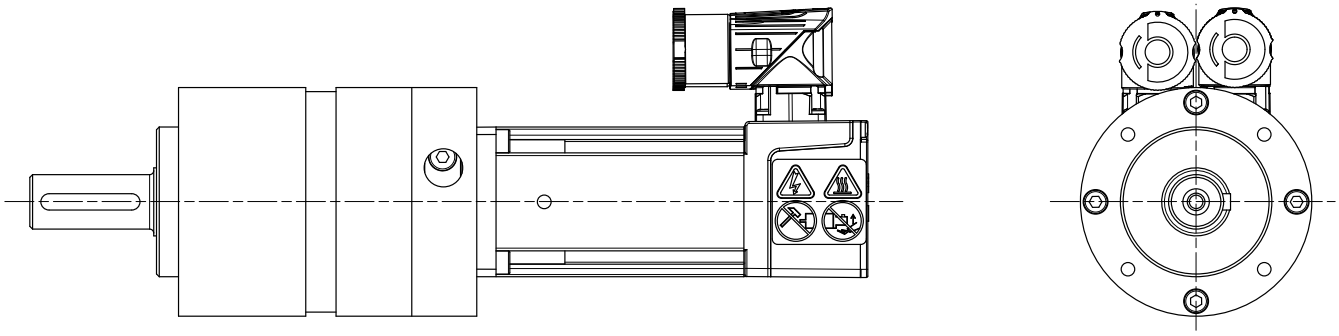

Operating position

Mounting with flange with tapped holes **BT**

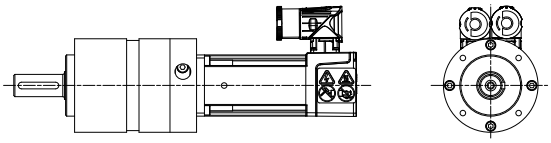

B14

Pje Dynabloc Servo gearbox
Ordering code information

Gearbox

Pje	0841	B14	BT	7	BASIC	MU-FF
Gearbox type	Size / Number of stages **0641, 0642, 0841, 0842** **1181, 1182, 1501, 1502**	Operating position **B14**	Mounting form **BT**	Exact ratio **3 - 70**	Backlash at output shaft **BASIC**	Motor input type **MU-FF**

Motor: Unimotor hd and fm

089	UD	B	30	0	B	A	CA	A
Unimotor hd **055, 067, 089, 115, 142** Unimotor fm **075, 095, 115, 142**	Unimotor hd voltage **UD** = 400 V **ED** = 220 V Unimotor fm voltage **U3** = 400 V **E3** = 220 V	Stator length **A, B, C, D, E**	Nominal speed* **30** = 3000 rpm **60** = 6000 rpm	Brake 24 V **0** = Without brake **5** = Parking brake	Connection type* = Power and Signal 90° rotatable (**J** = for Motor 142 UD)	Output shaft **Size 055:** **A** = With key **Sizes 067 - 142:** **E** = With half-key	Feedback device See Servo Drives and Motors technical catalogue	Inertia **A** = std **B** = High inertia (Unimotor fm only)

**For the full range of motor options, please refer to the Servo Drives and Motors Technical Catalogue*

We reserve the right to modify the design, technical specifications and dimensions of the products shown in this document.
The description cannot in any way be considered contractual.

Pje 0641 - 0642
Selection

Motor speed 3000 rpm

D+20 lead time (Ex Works)

Pje 0641 $M_{Red\text{-}S1}$ 26 N.m max

Motor type	Motor nominal torque	Motor peak torque	Motor inertia	Gearbox inertia	Exact ratio	Output speed	S1		S5	
							Gearbox nominal torque	Duty factor	Acceleration torque at gearbox	Duty factor at acceleration
	$M_{n\ mot}$	$M_{peak\ mot}$	J_{mot}	J_{red}	I_{exact}	n_2	$M_{n\ red}$	k_{S1}	$M_{acc\ red}$	k_{acc}*
	N.m	N.m	10^{-4} kg.m^2	10^{-4} kg.m^2		rpm	N.m		N.m	
055 UD A 30	0.70	2.88	0.14	0.45	3	1000	2.0	10.13	8.12	4.43
				0.38	4	750	2.6	9.88	10.8	4.06
				0.36	5	600	3.3	7.90	13.54	3.25
				0.35	7	429	4.6	5.64	19.0	2.32
				0.34	10	300	6.6	2.43	27.07	0.89
055 UD B 30	1.05	4.72	0.25	0.45	3	1000	3.0	6.75	13.31	2.70
				0.38	4	750	3.9	6.59	17.7	2.48
				0.36	5	600	4.9	5.27	22.18	1.98
				0.35	7	429	6.9	3.76	31.06	1.42
				0.34	10	300	9.9	1.62	44.37	0.54
055 UD C 30	1.48	6.6	0.36	0.45	3	1000	4.2	4.79	18.61	1.93
				0.38	4	750	5.6	4.67	24.82	1.77
				0.36	5	600	7.0	3.74	31.02	1.42
				0.35	7	429	9.7	2.67	43.43	1.01
				0.34	10	300	13.9	1.15	62.04	0.39
075 U3 B 30	2.30	8.00	1.22 (option 1.61)	0.45	3	1000	6.5	3.08	22.56	1.60
				0.38	4	750	8.6	3.01	30.08	1.46
				0.36	5	600	10.8	2.41	37.60	1.17
				0.35	7	429	15.1	1.72	52.64	0.84
067 UD B 30	2.45	7.65	0.53	0.45	3	1000	6.9	2.89	21.57	1.67
				0.38	4	750	9.2	2.82	28.76	1.53
				0.36	5	600	11.5	2.26	35.96	1.22
				0.35	7	429	16.1	1.61	50.34	0.87
067 UD C 30	3.50	11.10	0.75	0.45	3	1000	9.9	2.03	31.30	1.15
				0.38	4	750	13.2	1.98	41.74	1.05
				0.36	5	600	16.5	1.58	52.17	0.84
				0.35	7	429	23.0	1.13	73.0	0.60

Pje 0642 $M_{Red\text{-}S1}$ 44 N.m max

Motor type	Motor nominal torque	Motor peak torque	Motor inertia	Gearbox inertia	Exact ratio	Output speed	S1		S5	
							Gearbox nominal torque	Duty factor	Acceleration torque at gearbox	Duty factor at acceleration
	$M_{n\ mot}$	$M_{peak\ mot}$	J_{mot}	J_{red}	I_{exact}	n_2	$M_{n\ red}$	k_{S1}	$M_{acc\ red}$	k_{acc}*
	N.m	N.m	10^{-4} kg.m^2	10^{-4} kg.m^2		rpm	N.m		N.m	
055 UD A 30	0.70	2.88	0.14	0.38	12	250	7.7	4.66	31.8	1.42
				0.38	16	188	10.3	4.08	42.4	1.23
				0.36	20	150	12.9	3.26	53.0	0.98
				0.35	35	86	22.5	1.95	92.7	0.59
				0.34	50	60	32.2	1.37	132.5	0.42
055 UD B 30	1.05	4.72	0.25	0.38	12	250	11.6	3.11	52.1	0.86
				0.38	16	188	15.5	2.72	69.5	0.75
				0.36	20	150	19.3	2.17	86.8	0.60
055 UD C 30	1.48	6.6	0.36	0.38	12	250	16.3	2.20	72.9	0.62
				0.38	16	188	21.8	1.93	97.2	0.54
				0.36	20	150	27.2	1.54	121	0.43

* If kacc < 1, the acceleration torque must be reduced by limiting the current through the drive.

Pje 0641 - 0642
Selection

Motor speed 6000 rpm

Pje 0641 $M_{Red\text{-}S1}$ 26 N.m max

Motor type	Motor nominal torque	Motor peak torque	Motor inertia	Gearbox inertia	Exact ratio	Output speed	S1		S5	
							Gearbox nominal torque	Duty factor	Acceleration torque at gearbox	Duty factor at acceleration
	$M_{n\,mot}$	$M_{peak\,mot}$	J_{mot}	J_{red}	I_{exact}	n_2	$M_{n\,red}$	k_{S1}	$M_{acc\,red}$	k_{acc}*
	N.m	N.m	10^{-4} kg.m^2	10^{-4} kg.m^2		rpm	N.m		N.m	
055 UD A 60	0.68	2.88	0.14	0.45	3	2000	1.9	10.43	8.12	4.43
				0.38	4	1500	2.6	10.17	10.8	4.06
				0.36	5	1200	3.2	8.14	13.54	3.25
				0.35	7	857	4.5	5.81	19.0	2.32
				0.34	10	600	6.4	2.50	27.07	0.89
055 UD B 60	0.90	4.72	0.25	0.45	3	2000	2.5	7.88	13.31	2.70
				0.38	4	1500	3.4	7.68	17.7	2.48
				0.36	5	1200	4.2	6.15	22.18	1.98
				0.35	7	857	5.9	4.39	31.06	1.42
				0.34	10	600	8.5	1.89	44.37	0.54
055 UD C 60	1.2	6.60	0.36	0.45	3	2000	3.4	5.91	18.61	1.93
				0.38	4	1500	4.5	5.76	24.82	1.77
				0.36	5	1200	5.6	4.61	31.02	1.42
				0.35	7	857	7.9	3.29	43.43	1.01
				0.34	10	600	11.3	1.42	62.04	0.39
075 U3 B 60	1.90	8.00	1.22 (option 1.61)	0.45	3	2000	5.4	3.73	22.56	1.60
				0.38	4	1500	7.1	3.64	30.08	1.46
				0.36	5	1200	8.9	2.91	37.60	1.17
				0.35	7	857	12.5	2.08	52.64	0.84
067 UD B 60	2.20	7.65	0.53	0.45	3	2000	6.2	3.22	21.57	1.67
				0.38	4	1500	8.3	3.14	28.76	1.53
				0.36	5	1200	10.3	2.51	35.96	1.22
				0.35	7	857	14.5	1.80	50.34	0.87
067 UD C 60	3.50	11.10	0.75	0.45	3	2000	-	2.03	-	1.15
				0.38	4	1500	-	1.98	-	1.05
				0.36	5	1200	-	1.58	-	0.84
				0.35	7	857	-	1.13	-	0.60

Pje 0642 $M_{Red\text{-}S1}$ 44 N.m max

Motor type	Motor nominal torque	Motor peak torque	Motor inertia	Gearbox inertia	Exact ratio	Output speed	S1		S5	
							Gearbox nominal torque	Duty factor	Acceleration torque at gearbox	Duty factor at acceleration
	$M_{n\,mot}$	$M_{peak\,mot}$	J_{mot}	J_{red}	I_{exact}	n_2	$M_{n\,red}$	k_{S1}	$M_{acc\,red}$	k_{acc}*
	N.m	N.m	10^{-4} kg.m^2	10^{-4} kg.m^2		rpm	N.m		N.m	
055 UD A 60	0.68	2.88	0.14	0.38	12	500	7.5	4.80	31.8	1.42
				0.38	16	375	10.0	4.20	42.4	1.23
				0.36	20	300	12.5	3.36	53.0	0.98
				0.35	35	171	21.9	2.01	92.7	0.59
				0.34	50	120	31.3	1.41	132	0.42
055 UD B 60	0.9	4.72	0.25	0.38	12	500	9.9	3.62	52.1	0.86
				0.38	16	375	13.2	3.17	69.5	0.75
				0.36	20	300	16.6	2.54	86.8	0.60
				0.35	35	171	29.0	1.52	152	0.36
				0.34	50	120	41.4	1.06	217	0.25
055 UD C 60	1.2	6.6	0.36	0.38	12	500	13.2	2.72	72.9	0.62
				0.38	16	375	17.7	2.38	97.2	0.54
				0.36	20	300	22.1	1.90	121	0.43
				0.35	35	171	38.6	1.14	213	0.26

The maximum temperature on the housing must not exceed 90°C.

* If kacc < 1, the acceleration torque must be reduced by limiting the current through the drive.

Pje 0841
Selection

Motor speed 3000 rpm

Pje 0841 $M_{Red\text{-}S1}$ 54 N.m max

Motor type	Motor nominal torque	Motor peak torque	Motor inertia	Gearbox inertia	Exact ratio	Output speed	S1		S5	
							Gearbox nominal torque	Duty factor	Acceleration torque at gearbox	Duty factor at acceleration
	$M_{n\,mot}$	$M_{peak\,mot}$	J_{mot}	J_{red}	I_{exact}	n_2	$M_{n\,red}$	k_{S1}	$M_{acc\,red}$	k_{acc}*
	N.m	N.m	10^{-4} kg.m²	10^{-4} kg.m²		rpm	N.m		N.m	
055 UD A 30	0.70	2.88	0.14	1.37	3	1000	2.0	20.26	8.1	8.62
				1.14	4	750	2.6	20.52	10.8	9.23
				1.05	5	600	3.3	16.41	13.5	7.39
				0.97	7	429	4.6	11.72	19.0	5.28
				0.93	10	300	6.6	6.08	27.1	2.77
055 UD B 30	1.05	4.72	0.25	1.37	3	1000	3.0	13.51	13.3	5.26
				1.14	4	750	3.9	13.68	17.7	5.63
				1.05	5	600	4.9	10.94	22.2	4.51
				0.97	7	429	6.9	7.82	31.1	3.22
				0.93	10	300	9.9	4.05	44.4	1.69
055 UD C 30	1.48	6.6	0.36	1.37	3	1000	4.2	9.58	18.6	3.76
				1.14	4	750	5.6	9.70	24.8	4.03
				1.05	5	600	7.0	7.76	31.0	3.22
				0.97	7	429	9.7	5.55	43.4	2.30
				0.93	10	300	13.9	2.88	62.0	1.21
075 U3 B 30	2.30	8.00	1.22 (option 1.61)	1.37	3	1000	6.5	6.17	22.6	3.10
				1.14	4	750	8.6	6.24	30.1	3.32
				1.05	5	600	10.8	5.00	37.6	2.66
				0.97	7	429	15.1	3.57	52.6	1.90
				0.93	10	300	21.6	1.85	75.2	1.00
067 UD B 30	2.45	7.65	0.53	1.37	3	1000	6.9	5.79	21.6	3.24
				1.14	4	750	9.2	5.86	28.8	3.48
				1.05	5	600	11.5	4.69	36.0	2.78
				0.97	7	429	16.1	3.35	50.3	1.99
				0.93	10	300	23.0	1.74	71.9	1.04
067 UD C 30	3.50	11.10	0.75	1.37	3	1000	9.9	4.05	31.3	2.24
				1.14	4	750	13.2	4.10	41.7	2.40
				1.05	5	600	16.5	3.28	52.2	1.92
				0.97	7	429	23.0	2.34	73.0	1.37
				0.93	10	300	32.9	1.22	104	0.72
095 U3 B 30	4.10	13.50	2.6 (option 4.5)	1.37	3	1000	11.6	3.46	38	1.84
				1.14	4	750	15.4	3.50	51	1.97
				1.05	5	600	19.3	2.80	63	1.58
				0.97	7	429	27.0	2.00	89	1.13
				0.93	10	300	38.5	1.04	127	0.59
089 UD B 30	4.85	16.50	1.61	1.37	3	1000	13.7	2.92	46.5	1.50
				1.14	4	750	18.2	2.96	62.0	1.61
				1.05	5	600	22.8	2.37	77.6	1.29
				0.97	7	429	32.6	1.66	109	0.92
089 UD C 30	6.90	24.00	2.34	1.37	3	1000	19.5	2.06	67.7	1.03
				1.14	4	750	25.9	2.08	90.2	1.11
				1.05	5	600	32.4	1.67	113	0.89
				0.97	7	429	45.4	1.19	158	0.63
095 U3 D 30	6.90	23.70	4.83 (option 6.7)	1.37	3	1000	19.5	2.06	67	1.05
				1.14	4	750	25.9	2.08	89	1.12
				1.05	5	600	32.4	1.67	111	0.90
				0.97	7	429	45.4	1.19	156	0.64

* If kacc < 1, the acceleration torque must be reduced by limiting the current through the drive.

Pje 0842
Selection

Motor speed 3000 rpm

D+20 lead time (Ex Works)

Pje 0842 $M_{Red\text{-}S1}$ 100 N.m max

Motor type	Motor nominal torque	Motor peak torque	Motor inertia	Gearbox inertia	Exact ratio	Output speed	S1		S5	
							Gearbox nominal torque	Duty factor	Acceleration torque at gearbox	Duty factor at acceleration
	$M_{n\,mot}$	$M_{peak\,mot}$	J_{mot}	J_{red}	I_{exact}	n_2	$M_{n\,red}$	k_{S1}	$M_{acc\,red}$	k_{acc}*
	N.m	N.m	10^{-4} kg.m^2	10^{-4} kg.m^2		rpm	N.m		N.m	
055 UD A 30	0.70	2.88	0.14	1.14	12	250	7.7	10.35	31.8	3.15
				1.14	16	188	10.3	9.70	42.4	2.95
				1.05	20	150	12.9	7.8	53.0	2.4
				0.97	35	86	22.5	4.44	92.7	1.35
				0.93	50	60	32.2	3.1	132	0.9
				0.93	70	43	45.1	2.2	185	0.7
055 UD B 30	1.05	4.72	0.25	1.14	12	250	11.6	6.90	52.1	1.92
				1.14	16	188	15.5	6.47	69.5	1.80
				1.05	20	150	19.3	5.2	86.8	1.4
				0.97	35	86	33.8	3.0	152	0.8
				0.93	50	60	48.3	2.1	217	0.6
				0.93	70	43	67.6	1.5	304	0.4
055 UD C 30	1.48	6.6	0.36	1.14	12	250	16.3	4.9	72.9	1.4
				1.14	16	188	21.8	4.6	97.2	1.3
				1.05	20	150	27.2	3.7	121	1.0
				0.97	35	86	47.7	2.1	213	0.6
				0.93	50	60	68.1	1.5	304	0.4
				0.93	70	43	95.3	1.0	425	0.3
075 U3 B 30	2.30	8.00	1.22 (option 1.61)	1.14	12	250	25.4	3.2	88	1.1
				1.14	16	188	33.9	3.0	118	1.1
				1.05	20	150	42.3	2.4	147	0.8
				0.97	35	86	74.1	1.4	258	0.5
067 UD B 30	2.45	7.65	0.53	1.14	12	250	27.0	3.0	84.5	1.2
				1.14	16	188	36.1	2.8	113	1.1
				1.05	20	150	45.1	2.2	141	0.9
				0.97	35	86	78.9	1.3	246	0.5
067 UD C 30	3.50	11.10	0.75	1.14	12	250	38.6	2.1	123	0.8
				1.14	16	188	51.5	1.9	163	0.8
				1.05	20	150	64.4	1.6	204	0.6

* If kacc < 1, the acceleration torque must be reduced by limiting the current through the drive.

Pje 0841
Selection

Motor speed 6000 rpm

Pje 0841 $M_{Red\text{-}S1}$ 54 N.m max

Motor type	Motor nominal torque	Motor peak torque	Motor inertia	Gearbox inertia	Exact ratio	Output speed	S1		S5	
							Gearbox nominal torque	Duty factor	Acceleration torque at gearbox	Duty factor at acceleration
	$M_{n\,mot}$	$M_{peak\,mot}$	J_{mot}	J_{red}	I_{exact}	n_2	$M_{n\,red}$	k_{S1}	$M_{acc\,red}$	k_{acc}*
	N.m	N.m	10^{-4} kg.m^2	10^{-4} kg.m^2		rpm	N.m		N.m	
055 UD A 60	0.68	2.88	0.14	1.37	3	2000	1.9	20.86	8.1	8.62
				1.14	4	1500	2.6	21.12	10.8	9.23
				1.05	5	1200	3.2	16.90	13.5	7.39
				0.97	7	857	4.5	12.07	19.0	5.28
				0.93	10	600	6.4	6.26	27.1	2.77
055 UD B 60	0.90	4.72	0.25	1.37	3	2000	2.5	15.76	13.3	5.26
				1.14	4	1500	3.4	15.96	17.7	5.63
				1.05	5	1200	4.2	12.77	22.2	4.51
				0.97	7	857	5.9	9.12	31.1	3.22
				0.93	10	600	8.5	4.73	44.4	1.69
055 UD C 60	1.20	6.6	0.36	1.37	3	2000	3.4	11.82	18.6	3.76
				1.14	4	1500	4.5	11.97	24.8	4.03
				1.05	5	1200	5.6	9.57	31.0	3.22
				0.97	7	857	7.9	6.84	43.4	2.30
				0.93	10	600	11.3	3.55	62.0	1.21
075 U3 B 60	1.90	8.00	1.22 (option 1.61)	1.37	3	2000	5.4	7.47	22.6	3.10
				1.14	4	1500	7.1	7.56	30.1	3.32
				1.05	5	1200	8.9	6.05	37.6	2.66
				0.97	7	857	12.5	4.32	52.6	1.90
				0.93	10	600	17.9	2.24	75.2	1.00
067 UD B 60	2.20	7.65	0.53	1.37	3	2000	6.2	6.45	21.6	3.24
				1.14	4	1500	8.3	6.53	28.8	3.48
				1.05	5	1200	10.3	5.22	36.0	2.78
				0.97	7	857	14.5	3.73	50.3	1.99
				0.93	10	600	20.7	1.93	71.9	1.04
095 U3 B 60	3.20	13.50	2.6 (option 4.5)	1.37	3	2000	9.0	4.43	38.1	1.84
				1.14	4	1500	12.0	4.49	50.8	1.97
				1.05	5	1200	15.0	3.59	63.5	1.58
				0.97	7	857	21.1	2.56	88.8	1.13
				0.93	10	600	30.1	1.33	127	0.59
089 UD B 60	3.80	16.50	1.61	1.37	3	2000	10.7	3.73	46.5	1.50
				1.14	4	1500	14.3	3.78	62.0	1.61
				1.05	5	1200	17.9	3.02	77.6	1.29
				0.97	7	857	25.0	2.16	109	0.92
				0.93	10	600	35.7	1.12	155	0.48
089 UD C 60	5.00	24.00	2.34	1.37	3	2000	14.1	2.84	67.7	1.03
				1.14	4	1500	18.8	2.87	90.2	1.11
				1.05	5	1200	23.5	2.30	113	0.89
				0.97	7	857	32.9	1.64	158	0.63

The maximum temperature on the housing must not exceed 90°C.

* If kacc < 1, the acceleration torque must be reduced by limiting the current through the drive.

Pje 0842
Selection

Motor speed 6000 rpm

LOW BACKLASH

Pje 0842 $M_{Red\text{-}S1}$ 100 N.m max

Motor type	Motor nominal torque	Motor peak torque	Motor inertia	Gearbox inertia	Exact ratio	Output speed	S1		S5	
							Gearbox nominal torque	Duty factor	Acceleration torque at gearbox	Duty factor at acceleration
	$M_{n\,mot}$	$M_{peak\,mot}$	J_{mot}	J_{red}	I_{exact}	n_2	$M_{n\,red}$	k_{S1}	$M_{acc\,red}$	k_{acc}*
	N.m	N.m	10^{-4} kg.m^2	10^{-4} kg.m^2		rpm	N.m		N.m	
055 UD A 60	0.68	2.88	0.14	1.14	12	500	7.5	10.66	31.8	3.15
				1.14	16	375	10.0	9.99	42.4	2.95
				1.05	20	300	12.5	8.0	53.0	2.4
				0.97	35	171	21.9	4.57	92.7	1.35
				0.93	50	120	31.3	3.2	132	0.9
				0.93	70	86	43.8	2.3	185	0.7
055 UD B 60	0.90	4.72	0.25	1.14	12	500	9.9	8.05	52.1	1.92
				1.14	16	375	13.2	7.55	69.5	1.80
				1.05	20	300	16.6	6.0	86.8	1.4
				0.97	35	171	29.0	3.5	152	0.8
				0.93	50	120	41.4	2.4	217	0.6
				0.93	70	86	58.0	1.7	304	0.4
055 UD C 60	1.20	6.6	0.36	1.14	12	500	13.2	6.0	72.9	1.4
				1.14	16	375	17.7	5.7	97.2	1.3
				1.05	20	300	22.1	4.5	121	1.0
				0.97	35	171	38.6	2.6	213	0.6
				0.93	50	120	55.2	1.8	304	0.4
				0.93	70	86	77.3	1.3	425	0.3
075 U3 B 60	1.90	8.00	1.22 (option 1.61)	1.14	12	500	21.0	3.8	88	1.1
				1.14	16	375	28.0	3.6	118	1.1
				1.05	20	300	35.0	2.9	147	0.8
				0.97	35	171	61.2	1.6	258	0.5
067 UD B 60	2.20	7.65	0.53	1.14	12	500	24.3	3.3	84.5	1.2
				1.14	16	375	32.4	3.1	113	1.1
				1.05	20	300	40.5	2.5	141	0.9
				0.97	35	171	70.8	1.4	246	0.5

The maximum temperature on the housing must not exceed 90°C.

* If kacc < 1, the acceleration torque must be reduced by limiting the current through the drive.

Pje 1181
Selection

Motor speed 3000 rpm

D+20 lead time (Ex Works)

Pje 1181 $M_{Red\text{-}S1}$ 120 N.m max

Motor type	Motor nominal torque	Motor peak torque	Motor inertia	Gearbox inertia	Exact ratio	Output speed	S1		S5	
							Gearbox nominal torque	Duty factor	Acceleration torque at gearbox	Duty factor at acceleration
	$M_{n\,mot}$	$M_{peak\,mot}$	J_{mot}	J_{red}	I_{exact}	n_2	$M_{n\,red}$	k_{S1}	$M_{acc\,red}$	k_{acc}*
	N.m	N.m	10^{-4} kg.m^2	10^{-4} kg.m^2		rpm	N.m		N.m	
095 U3 B 30	4.10	13.50	2.6 (option 4.5)	6.54	3	1000	11.6	8.65	38.1	4.73
				4.8	4	750	15.4	7.78	50.8	3.94
				4.05	5	600	19.3	6.23	63.5	3.15
				3.4	7	429	27.0	4.45	88.8	2.25
				3.1	10	300	38.5	2.72	127	1.42
089 UD B 30	4.85	16.50	1.61	6.54	3	1000	13.7	7.31	46.5	3.87
				4.8	4	750	18.2	6.58	62.0	3.22
				4.05	5	600	22.8	5.26	77.6	2.58
				3.4	7	429	31.9	3.76	109	1.84
				3.1	10	300	45.6	2.30	155	1.16
089 UD C 30	6.90	24.00	2.34	6.54	3	1000	19.5	5.14	67.7	2.66
				4.8	4	750	25.9	4.63	90.2	2.22
				4.05	5	600	32.4	3.70	113	1.77
				3.4	7	429	45.4	2.64	158	1.27
				3.1	10	300	64.9	1.62	226	0.80
095 U3 D 30	6.90	23.70	4.83 (option 6.7)	6.54	3	1000	19.5	5.14	66.8	2.69
				4.8	4	750	25.9	4.63	89.1	2.24
				4.05	5	600	32.4	3.70	111	1.80
				3.4	7	429	45.4	2.64	156	1.28
				3.1	10	300	64.9	1.62	223	0.81
115 UD C 30	10.50	43.80	6.39	6.54	3	1000	29.6	3.38	124	1.46
				4.8	4	750	39.5	3.04	165	1.21
				4.05	5	600	49.4	2.43	206	0.97
				3.4	7	429	69.1	1.74	288	0.69
				3.1	10	300	98.7	1.06	412	0.44
115 U3 D 30	11.20	41.00	12.5 (option 17.1)	6.54	3	1000	31.6	3.17	116	1.56
				4.8	4	750	42.1	2.85	154	1.30
				4.05	5	600	52.6	2.28	193	1.04
				3.4	7	429	73.7	1.63	270	0.74
				3.1	10	300	105	1.00	385	0.47
115 UD D 30	13.60	56.40	8.38	6.54	3	1000	38.4	2.61	159	1.13
				4.8	4	750	51.1	2.35	212	0.94
				4.05	5	600	63.9	1.88	265	0.75
				3.4	7	429	89.5	1.34	371	0.54

LOW BACKLASH

* If kacc < 1, the acceleration torque must be reduced by limiting the current through the drive.

Pje 1182
Selection

Motor speed 3000 rpm

D+20 lead time (Ex Works)

Pje 1182 M_{Red-S1} 120 N.m max

Motor type	Motor nominal torque	Motor peak torque	Motor inertia	Gearbox inertia	Exact ratio	Output speed	S1		S5	
							Gearbox nominal torque	Duty factor	Acceleration torque at gearbox	Duty factor at acceleration
	$M_{n\,mot}$	$M_{peak\,mot}$	J_{mot}	J_{red}	I_{exact}	n_2	$M_{n\,red}$	k_{S1}	$M_{acc\,red}$	k_{acc}*
	N.m	N.m	10^{-4} kg.m^2	10^{-4} kg.m^2		rpm	N.m		N.m	
095 U3 B 30	4.10	13.5	2.6 (option 4.5)	4.8	12	250	45.3	3.76	149	1.44
				4.8	16	188	60.4	3.48	199	1.28
				4.05	20	150	75.4	2.78	248	1.03
				3.4	35	86	132	1.59	435	0.59
089 UD B 30	4.85	16.50	1.61	4.8	12	250	53.5	3.17	182	1.18
				4.8	16	188	71.4	2.94	243	1.05
				4.05	20	150	89.2	2.35	304	0.84
				3.4	35	86	156	1.34	531	0.48
089 UD C 30	6.90	24.00	2.34	4.8	12	250	76.2	2.23	265	0.81
				4.8	16	188	102	2.07	353	0.72
				4.05	20	150	127	1.65	442	0.58
095 U3 D 30	6.90	23.7	4.83 (option 6.7)	4.8	12	250	76.2	2.23	262	0.82
				4.8	16	188	102	2.07	349	0.73
				4.05	20	150	127	1.65	436	0.58

* If kacc < 1, the acceleration torque must be reduced by limiting the current through the drive.

Pje 1501
Selection

Motor speed 3000 rpm

D+20 lead time (Ex Works)

Pje 1501 $M_{Red\text{-}S1}$ **310 N.m max**

Motor type	Motor nominal torque	Motor peak torque	Motor inertia	Gearbox inertia	Exact ratio	Output speed	S1		S5	
							Gearbox nominal torque	Duty factor	Acceleration torque at gearbox	Duty factor at acceleration
	$M_{n\,mot}$	$M_{peak\,mot}$	J_{mot}	J_{red}	I_{exact}	n_2	$M_{n\,red}$	k_{S1}	$M_{acc\,red}$	k_{acc}*
	N.m	N.m	10^{-4} kg.m^2	10^{-4} kg.m^2		rpm	N.m		N.m	
115 UD C 30	10.50	43.80	6.39	12.23	3	1000	29.6	7.77	124	2.91
				7.65	4	750	39.5	7.85	165	2.79
				6.24	5	600	49.4	6.28	206	2.23
				4.7	7	429	69.1	4.49	288	1.60
				3.8	10	300	98.7	1.82	412	0.83
115 U3 D 30	11.20	41.00	12.5 (option 17.1)	12.23	3	1000	31.6	7.28	116	3.11
				7.65	4	750	42.1	7.36	154	2.98
				6.24	5	600	52.6	5.89	193	2.39
				4.7	7	429	73.7	4.21	270	1.71
				3.8	10	300	105	1.71	385	0.88
115 UD D 30	13.60	56.40	8.38	12.23	3	1000	38.4	6.00	159	2.26
				7.65	4	750	51.1	6.06	212	2.17
				6.24	5	600	63.9	4.85	265	1.74
				4.7	7	429	89.5	3.46	371	1.24
				3.8	10	300	128	1.41	530	0.64
142 U3 E 30	18.20	75.00	36.9 (option 49.8)	12.23	3	1000	51.3	4.48	212	1.70
				7.65	4	750	68.4	4.53	282	1.63
				6.24	5	600	85.5	3.62	353	1.30
				4.7	7	429	120	2.59	494	0.93
				3.8	10	300	171	1.05	705	0.48
142 UD C 30	18.40	74.90	17.0	12.23	3	1000	51.9	4.43	211	1.70
				7.65	4	750	69.2	4.48	282	1.63
				6.24	5	600	86.5	3.58	352	1.31
				4.7	7	429	121	2.56	493	0.93
				3.8	10	300	173	1.04	704	0.48
142 UD E 30	23.00	114.00	27.2	12.23	3	1000	64.9	3.55	321	1.12
				7.65	4	750	86.5	3.58	429	1.07
				6.24	5	600	108	2.87	536	0.86
				4.7	7	429	151	2.05	750	0.61

LOW BACKLASH

* If kacc < 1, the acceleration torque must be reduced by limiting the current through the drive.

Pje 1502
Selection

Motor speed 3000 rpm

D+20 lead time (Ex Works)

Pje 1502 $M_{Red\text{-}S1}$ 340 N.m max

Motor type	Motor nominal torque	Motor peak torque	Motor inertia	Gearbox inertia	Exact ratio	Output speed	S1		S5	
							Gearbox nominal torque	Duty factor	Acceleration torque at gearbox	Duty factor at acceleration
	$M_{n\,mot}$	$M_{peak\,mot}$	J_{mot}	J_{red}	I_{exact}	n_2	$M_{n\,red}$	k_{S1}	$M_{acc\,red}$	k_{acc}*
	N.m	N.m	10^{-4} kg.m^2	10^{-4} kg.m^2		rpm	N.m		N.m	
115 UD C 30	10.50	43.80	6.39	7.65	12	250	116	3.11	484	0.74
				7.65	16	188	155	2.20	645	0.71
				6.24	20	150	193	1.76	806	0.57
				4.7	35	86	338	1.01	1410	0.33
115 U3 D 30	11.20	41.00	12.5 (option 17.1)	7.65	12	250	124	2.91	453	0.74
				7.65	16	188	165	2.06	604	0.71
				6.24	20	150	206	1.65	754	0.57
				4.7	35	86	361	0.94	1320	0.33
115 UD D 30	13.60	56.40	8.38	7.65	12	250	150	2.40	623	0.58
				7.65	16	188	200	1.70	830	0.55
				6.24	20	150	250	1.36	1038	0.44
142 U3 E 30	18.20	75.00	36.9 (option 49.8)	7.65	12	250	201	1.79	828	0.43
				7.65	16	188	268	1.27	1104	0.42
				6.24	20	150	335	1.02	1380	0.33
142 UD C 30	18.40	74.90	17.0	7.65	12	250	203	1.77	827	0.44
				7.65	16	188	271	1.26	1103	0.42
				6.24	20	150	339	1.00	1378	0.33
142 UD E 30	23.00	114.00	27.2	7.65	12	250	254	1.42	1259	0.29
				7.65	16	188	339	1.00	1678	0.27

* If kacc < 1, the acceleration torque must be reduced by limiting the current through the drive.

Pje Dynabloc Servo gearbox
Dimensions - Flange with tapped holes BT

Pje 0641 to Pje 1502 - Universal mounting MU-FF

Dimensions in mm

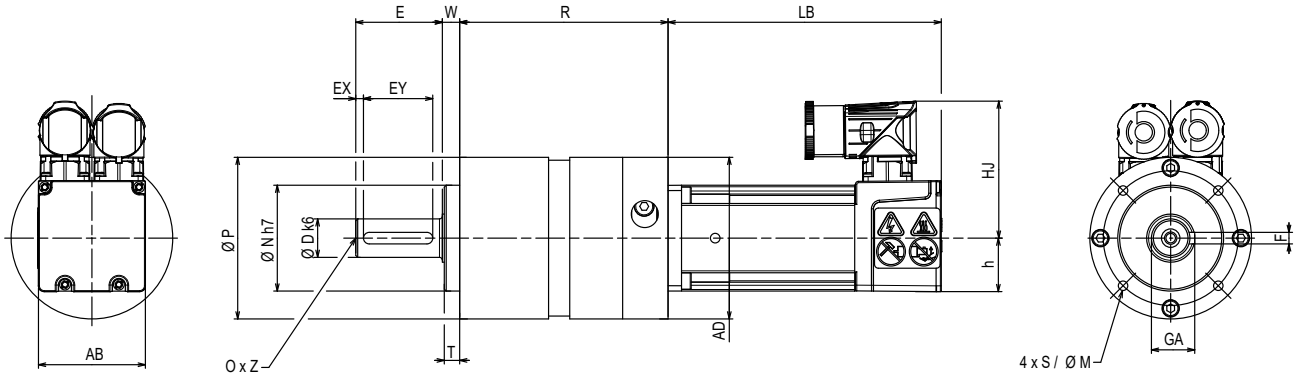

Type 1-stage / 2-stage	Gearbox								Solid output shaft							
	AD	M	N	P	S	T	W	Weight kg	D	E	F	GA	EY	EX	O	Z
Pje 0641 / 0642	70	52	40	64	M5x12	8	9	1 / 1.3	14	30	5	16	25	1.5	M5	12
Pje 0841 / 0842	90	70	55	84	M6x14	8	9	2.3 / 3.1	20	45	6	22.5	36	4.5	M6	16
Pje 1181 / 1182	120	100	80	118	M8x18	10	11	5.8 / 7.9	25	50	8	28	45	1.5	M10	22
Pje 1501 / 1502	140	130	110	150	M10x20	5.5	12	10 / 12.5	40	70	12	44	60	5	M10	26

Motor type		Unimotor							Gearbox type							
		Without brake		With brake					Pje							
		LB	Weight kg	LB	Weight kg	AB	HJ	h	0641	0642	0841	0842	1181	1182	1501	1502
									R							
Unimotor hd	**055 UD A**	118	1.2	158	1.6	55	72	27.5	86	108	108	141	-	-	-	-
	055 UD B	142	1.5	182	1.9	55	72	27.5	86	108	108	141	-	-	-	-
	055 UD C	166	1.8	206	2.2	55	72	27.5	86	108	108	141	-	-	-	-
	067 UD B	173	2.6	208	3.3	70	77	35	86	-	108	141	-	-	-	-
	067 UD C	203	3.2	238	3.9	70	77	35	86	-	108	141	-	-	-	-
	089 UD B	191	4.4	231	5.4	91	85	45.5	-	-	118	-	138	178	-	-
	089 UD C	221	5.5	261	6.5	91	85	45.5	-	-	118	-	138	178	-	-
	115 UD C	237	8.9	274	10.4	116	99	58	-	-	-	-	148	-	193	234
	115 UD D	267	10.7	304	12.2	116	99	58	-	-	-	-	148	-	193	234
	142 UD C	217	11.5	283	14.3	142	113	71	-	-	-	-	-	-	203	244
	142 UD E	277	18.5	343	21.3	142	113	71	-	-	-	-	-	-	203	244
Unimotor fm	**075 U3 B**	239	3.7	269	4.2	75	89	37.5	86	-	108	141	-	-	-	-
	095 U3 B	257	5.8	287	6.4	90	94	45	-	-	118	-	138	178	-	-
	095 U3 D	317	8.2	347	8.8	90	94	45	-	-	118	-	138	178	-	-
	115 U3 D	337	12.6	367	13.8	115	99	57.5	-	-	-	-	148	-	193	234
	142 U3 E	313	20.7	373	22.5	142	113	71	-	-	-	-	-	-	203	244

Max. length depending on the feedback

Pjr Dynabloc Servo gearbox
General

LOW BACKLASH

Pjr Dynabloc

• A high performance planetary solution

- **Very low backlash**
- **Very high torsional stiffness**
- **High overload capacity**
- **Lightweight and compact**
- **Unimotor fm or hd**

Pjr Dynabloc servo gearboxes are designed to reduce the speed and increase the torque of servo motors and to optimize the ratio of inertia between the driven load and the motor.

Pjr Dynabloc gearboxes are the perfect solution for servo applications requiring the highest performance. They provide very low backlash and very high torsional stiffness and have a high overload capacity. Lightweight and compact, the gearboxes can be easily integrated into machines. Maintenance-free, they are supplied lubricated and are mulitpositional.

Pjr Dynabloc gearboxes are available with Unimotor fm motors for continuous duty applications with high inertia loads or Unimotor hd motors for pulse duty applications requiring high dynamics. Standard motor speed is 3000 rpm, a motor speed of 6000 rpm is also available for the smallest sizes.

Description	
Range	5 sizes from 0601 to 1802
Nominal torque	26 - 600 N.m
Max acceleration torque	Up to 1300 N.m
Gearbox ratio	1-stage: ratios from 3 to 10 2-stage: ratios from 12 to 70
Backlash	MEDIUM • 1-stage: 4 to 6' • 2-stage: 6 to 7' EXPERT • 1-stage: 2 to 4' • 2-stage: 4 to 5'
Lubrication	Life lubricated, multiposition
Efficiency	1-stage: 96 % 2-stage: 94 %
Output shaft	Solid shaft with key
Unimotor hd Unimotor fm	Nominal speed 2000 rpm to 6000 rpm depending on size Connectors rotatable by 90° Incremental or absolute encoder Motor with or without brake Universal mounting with servo coupling
Finish	Painted (RAL 9005 black) and unpainted aluminium

Pjr Dynabloc Servo gearbox
Technical characteristics

Gearbox type	Exact ratio	Efficiency	Torsional stiffness	Angular backlash			Max. radial load F_r at E/2	Max. axial load F_a
				arcmin				
			N.m/arcmin	BASIC	MEDIUM	EXPERT	N	N
Pjr 0601	3	0.96	5	-	< 6	< 4	3000	2400
	4							
	5							
	7							
	10							
Pjr 0602	12	0.94	5	-	< 7	< 5	3000	2400
	16							
	20							
	35							
	50							
Pjr 0751	3	0.96	13	-	< 5	< 3	4200	3800
	4							
	5							
	7							
	10							
Pjr 0752	12	0.94	13	-	< 6	< 4	4200	3800
	16							
	20							
	35							
	50							
	70							
Pjr 1001	3	0.96	40	-	< 5	< 3	6300	5600
	4							
	5							
	7							
	10							
Pjr 1002	12	0.94	40	-	< 6	< 4	6300	5600
	16							
	20							
	35							
Pjr 1401	3	0.96	56	-	< 5	< 3	11000	10600
	4							
	5							
	7							
	10							
Pjr 1402	12	0.94	56	-	< 6	< 4	11000	10600
	16							
	20							
	35							
Pjr 1801	3	0.96	130	-	< 4	< 2	13000	13500
	4							
	5							
	7							
	10							
Pjr 1802	12	0.94	130	-	< 6	< 4	13000	13500
	16							
	20							
	35							

Pjr Dynabloc Servo gearbox
Mounting form - Operating position

Mounting form

Mounting with flange with through holes **BS**

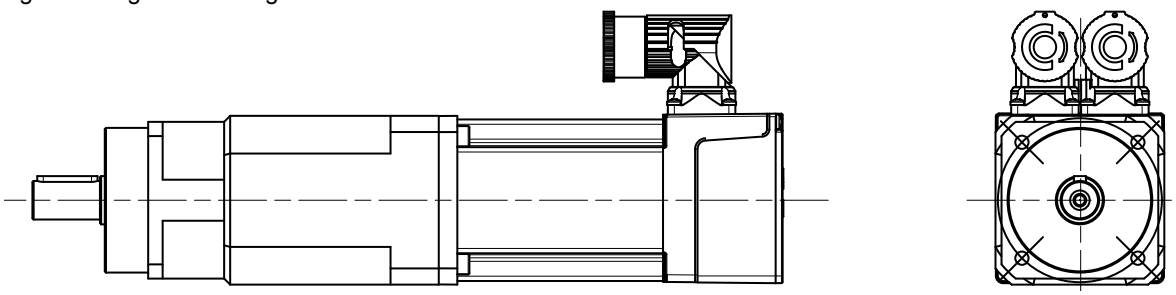

Operating position

Mounting with flange with through holes **BS**

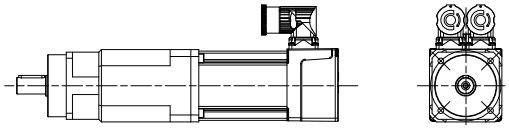

B5

Pjr Dynabloc Servo gearbox
Ordering code information

Gearbox

Pjr	1401	B5	BS	7	EXPERT	MU-FF
Gearbox type	Size / Number of stages **0601, 0602, 0751, 0752, 1001, 1002, 1401, 1402, 1801, 1802**	Operating position **B5**	Mounting form **BS**	Exact ratio **3 - 70**	Backlash at output shaft **MEDIUM** **EXPERT**	Motor input type **MU-FF**

Motor: Unimotor hd and fm

089	UD	B	30	0	B	A	CA	A
Unimotor hd **055, 067, 089, 115, 142, 190**	Unimotor hd voltage **UD** = 400 V **ED** = 220 V	Stator length **A, B, C, D, E**	Nominal speed* **Sizes 055 - 142:** **30** = 3000 rpm **60** = 6000 rpm **Size 190:** **20**= 2000 rpm	Brake 24 V **0** = Without brake **5** = Parking brake	Connection type* **B** = Power and Signal 90° rotatable (**J** = for Motor 190 U3 and 142 UD)	Output shaft **Size 055:** **A** = With key **Sizes 067 - 190:** **E** = With half-key	Feedback device See Servo Drives and Motors technical catalogue	Inertia **A** = std **B** = High inertia (Unimotor fm only)
Unimotor fm **075, 095, 115, 142, 190**	Unimotor fm voltage **U3** = 400 V **E3** = 220 V							

**For the full range of motor options, please refer to the Servo Drives and Motors Technical Catalogue*

We reserve the right to modify the design, technical specifications and dimensions of the products shown in this document.
The description cannot in any way be considered contractual.

Pjr 0601 - Pjr 0602
Selection

Motor speed 3000 rpm

D+20 lead time (Ex Works)
valid only for Low Backlash MEDIUM

Pjr 0601 M_{Red-S1} 32 N.m max

Motor type	Motor nominal torque	Motor peak torque	Motor inertia	Gearbox inertia	Exact ratio	Output speed	S1		S5	
							Gearbox nominal torque	Duty factor	Acceleration torque at gearbox	Duty factor at acceleration
	$M_{n\,mot}$	$M_{peak\,mot}$	J_{mot}	J_{red}	I_{exact}	n_2	$M_{n\,red}$	k_{S1}	$M_{acc\,red}$	k_{acc}*
	N.m	N.m	10^{-4} kg.m^2	10^{-4} kg.m^2		rpm	N.m		N.m	
055 UD A 30	0.70	2.88	0.14	0.43	3	1000	2.0	12.90	8.3	4.34
				0.33	4	750	2.7	11.90	11.1	4.52
				0.27	5	600	3.4	9.52	13.8	3.62
				0.23	7	429	4.7	6.80	19.4	2.58
				0.20	10	300	6.7	3.57	27.6	1.30
055 UD B 30	1.05	4.72	0.25	0.43	3	1000	3.0	8.60	13.6	2.65
				0.33	4	750	4.0	7.94	18.1	2.76
				0.27	5	600	5.0	6.35	22.7	2.21
				0.23	7	429	7.1	4.54	31.7	1.58
				0.20	10	300	10.1	2.38	45.3	0.79
055 UD C 30	1.48	6.6	0.36	0.43	3	1000	4.3	6.10	19.0	1.89
				0.33	4	750	5.7	5.63	25.3	1.97
				0.27	5	600	7.1	4.50	31.7	1.58
				0.23	7	429	9.9	3.22	44.4	1.13
				0.20	10	300	14.2	1.69	63.4	0.57
075 U3 B 30	2.30	8.00	1.22 (option 1.61)	0.43	3	1000	6.6	3.93	23.0	1.56
				0.33	4	750	8.8	3.62	30.7	1.63
				0.27	5	600	11.0	2.90	38.4	1.30
				0.23	7	429	15.5	2.07	53.8	0.93
				0.20	10	300	22.1	1.09	76.8	0.47
067 UD B 30	2.45	7.65	0.53	0.43	3	1000	7.1	3.68	22.0	1.63
				0.33	4	750	9.4	3.40	29.4	1.70
				0.27	5	600	11.8	2.72	36.7	1.36
				0.23	7	429	16.5	1.94	51.4	0.97
				0.20	10	300	23.5	1.02	73.4	0.49
067 UD C 30	3.50	11.10	0.75	0.43	3	1000	10.1	2.58	32.0	1.13
				0.33	4	750	13.4	2.38	42.6	1.17
				0.27	5	600	16.8	1.90	53.3	0.94
				0.23	7	429	23.5	1.36	74.6	0.67

Pjr 0602 M_{Red-S1} 38 N.m max

Motor type	Motor nominal torque	Motor peak torque	Motor inertia	Gearbox inertia	Exact ratio	Output speed	S1		S5	
							Gearbox nominal torque	Duty factor	Acceleration torque at gearbox	Duty factor at acceleration
	$M_{n\,mot}$	$M_{peak\,mot}$	J_{mot}	J_{red}	I_{exact}	n_2	$M_{n\,red}$	k_{S1}	$M_{acc\,red}$	k_{acc}*
	N.m	N.m	10^{-4} kg.m^2	10^{-4} kg.m^2		rpm	N.m		N.m	
055 UD A 30	0.70	2.88	0.14	0.36	12	250	7.9	4.81	32.5	1.66
				0.36	16	188	10.5	3.61	43.3	1.25
				0.32	20	150	13.2	2.89	54.1	1.00
				0.28	35	86	23.0	1.65	94.8	0.57
				0.27	50	60	32.9	1.16	135	0.40
055 UD B 30	1.05	4.72	0.25	0.36	12	250	11.8	3.21	53.2	1.01
				0.36	16	188	15.8	2.41	71.0	0.76
				0.32	20	150	19.7	1.93	88.7	0.61
055 UD C 30	1.48	6.6	0.36	0.36	12	250	16.7	2.28	74.4	0.73
				0.36	16	188	22.3	1.71	99.3	0.54
				0.32	20	150	27.8	1.37	124	0.44

* If kacc < 1, the acceleration torque must be reduced by limiting the current through the drive.

Pjr 0601 - Pjr 0602
Selection

Motor speed 6000 rpm

Pjr 0601 $M_{Red\text{-}S1}$ 32 N.m max

Motor type	Motor nominal torque	Motor peak torque	Motor inertia	Gearbox inertia	Exact ratio	Output speed	S1		S5	
							Gearbox nominal torque	Duty factor	Acceleration torque at gearbox	Duty factor at acceleration
	$M_{n\,mot}$	$M_{peak\,mot}$	J_{mot}	J_{red}	I_{exact}	n_2	$M_{n\,red}$	k_{S1}	$M_{acc\,red}$	k_{acc}*
	N.m	N.m	10^{-4} kg.m^2	10^{-4} kg.m^2		rpm	N.m		N.m	
055 UD A 60	0.68	2.88	0.14	0.43	3	2000	2.0	13.28	8.3	4.34
				0.33	4	1500	2.6	12.25	11.1	4.52
				0.27	5	1200	3.3	9.80	13.8	3.62
				0.23	7	857	4.6	7.00	19.4	2.58
				0.20	10	600	6.5	3.68	27.6	1.30
055 UD B 60	0.90	4.72	0.25	0.43	3	2000	2.6	10.03	13.6	2.65
				0.33	4	1500	3.5	9.26	18.1	2.76
				0.27	5	1200	4.3	7.41	22.7	2.21
				0.23	7	857	6.0	5.29	31.7	1.58
				0.20	10	600	8.6	2.78	45.3	0.79
055 UD C 60	1.2	6.6	0.36	0.43	3	2000	3.5	7.52	19.0	1.89
				0.33	4	1500	4.6	6.94	25.3	1.97
				0.27	5	1200	5.8	5.56	31.7	1.58
				0.23	7	857	8.1	3.97	44.4	1.13
				0.20	10	600	11.5	2.08	63.4	0.57
075 U3 B 60	1.90	8.00	1.22 (option 1.61)	0.43	3	2000	5.5	4.75	23.0	1.56
				0.33	4	1500	7.3	4.39	30.7	1.63
				0.27	5	1200	9.1	3.51	38.4	1.30
				0.23	7	857	12.8	2.51	53.8	0.93
				0.20	10	600	18.2	1.32	76.8	0.47
067 UD B 60	2.20	7.65	0.53	0.43	3	2000	6.3	4.10	22.0	1.63
				0.33	4	1500	8.4	3.79	29.4	1.70
				0.27	5	1200	10.6	3.03	36.7	1.36
				0.23	7	857	14.8	2.16	51.4	0.97
				0.20	10	600	21.1	1.14	73.4	0.49

Pjr 0602 $M_{Red\text{-}S1}$ 38 N.m max

Motor type	Motor nominal torque	Motor peak torque	Motor inertia	Gearbox inertia	Exact ratio	Output speed	S1		S5	
							Gearbox nominal torque	Duty factor	Acceleration torque at gearbox	Duty factor at acceleration
	$M_{n\,mot}$	$M_{peak\,mot}$	J_{mot}	J_{red}	I_{exact}	n_2	$M_{n\,red}$	k_{S1}	$M_{acc\,red}$	k_{acc}*
	N.m	N.m	10^{-4} kg.m^2	10^{-4} kg.m^2		rpm	N.m		N.m	
055 UD A 60	0.68	2.88	0.14	0.36	12	500	7.7	4.95	32.5	1.66
				0.36	16	375	10.2	3.72	43.3	1.25
				0.32	20	300	12.8	2.97	54.1	1.00
				0.28	35	171	22.4	1.70	94.8	0.57
				0.27	50	120	32.0	1.19	135	0.40
055 UD B 60	0.90	4.72	0.25	0.36	12	500	10.2	3.74	53.2	1.01
				0.36	16	375	13.5	2.81	71.0	0.76
				0.32	20	300	16.9	2.25	88.7	
				0.28	35	171	29.6	1.28	155	0.61
055 UD C 60	1.2	6.6	0.36	0.36	12	500	13.5	2.81	74.4	0.73
				0.36	16	375	18.0	2.11	99.3	0.54
				0.32	20	300	22.6	1.68	124	
				0.28	35	171	39.5	1.00	217	0.44

The maximum temperature on the housing must not exceed 90°C.

* If kacc < 1, the acceleration torque must be reduced by limiting the current through the drive.

Pjr 0751
Selection

Motor speed 3000 rpm

Pjr 0751 $M_{Red\text{-}S1}$ 65 N.m max

Motor type	Motor nominal torque	Motor peak torque	Motor inertia	Gearbox inertia	Exact ratio	Output speed	S1		S5	
							Gearbox nominal torque	Duty factor	Acceleration torque at gearbox	Duty factor at acceleration
	$M_{n\ mot}$	$M_{peak\ mot}$	J_{mot}	J_{red}	I_{exact}	n_2	$M_{n\ red}$	k_{S1}	$M_{acc\ red}$	k_{acc}*
	N.m	N.m	10^{-4} kg.m^2	10^{-4} kg.m^2		rpm	N.m		N.m	
055 UD A 30	0.70	2.88	0.14	1.15	3	1000	2.0	19.35	8.3	9.65
				0.92	4	750	2.7	24.18	11.1	10.85
				0.81	5	600	3.4	19.35	13.8	8.68
				0.72	7	429	4.7	13.82	19.4	6.20
				0.67	10	300	6.7	5.95	27.6	3.40
055 UD B 30	1.05	4.72	0.25	1.15	3	1000	3.0	12.90	13.6	5.89
				0.92	4	750	4.0	16.12	18.1	6.62
				0.81	5	600	5.0	12.90	22.7	5.30
				0.72	7	429	7.1	9.21	31.7	3.78
				0.67	10	300	10.1	3.97	45.3	2.07
055 UD C 30	1.48	6.6	0.36	1.15	3	1000	4.3	9.15	19.0	4.21
				0.92	4	750	5.7	11.44	25.3	4.73
				0.81	5	600	7.1	9.15	31.7	3.79
				0.72	7	429	9.9	6.54	44.4	2.71
				0.67	10	300	14.2	2.82	63.4	1.48
075 U3 B 30	2.30	8.00	1.22 (option 1.61)	1.15	3	1000	6.6	5.89	23.0	3.47
				0.92	4	750	8.8	7.36	30.7	3.91
				0.81	5	600	11.0	5.89	38.4	3.13
				0.72	7	429	15.5	4.21	53.8	2.23
				0.67	10	300	22.1	1.81	76.8	1.22
067 UD B 30	2.45	7.65	0.53	1.15	3	1000	7.1	5.53	22.0	3.63
				0.92	4	750	9.4	6.91	29.4	4.08
				0.81	5	600	11.8	5.53	36.7	3.27
				0.72	7	429	16.5	3.95	51.4	2.33
				0.67	10	300	23.5	1.70	73.4	1.28
067 UD C 30	3.50	11.10	0.75	1.15	3	1000	10.1	3.87	32.0	2.50
				0.92	4	750	13.4	4.84	42.6	2.82
				0.81	5	600	16.8	3.87	53.3	2.25
				0.72	7	429	23.5	2.76	74.6	1.61
				0.67	10	300	33.6	1.19	107	0.88
095 U3 B 30	4.10	13.50	2.6 (option 4.5)	1.15	3	1000	11.8	3.30	38.9	2.06
				0.92	4	750	15.7	4.13	51.8	2.31
				0.81	5	600	19.7	3.30	64.8	1.85
				0.72	7	429	27.6	2.36	90.7	1.32
				0.67	10	300	39.4	1.02	130	0.73
089 UD B 30	4.85	16.50	1.61	1.15	3	1000	14.0	2.79	47.5	1.68
				0.92	4	750	18.6	3.49	63.4	1.89
				0.81	5	600	23.3	2.79	79.2	1.52
				0.72	7	429	32.6	1.99	111	1.08
089 UD C 30	6.90	24.00	2.34	1.15	3	1000	19.9	1.96	69.1	1.16
				0.92	4	750	26.5	2.45	92.2	1.30
				0.81	5	600	33.1	1.96	115	1.04
				0.72	7	429	46.4	1.40	161	0.74
095 U3 D 30	6.90	23.70	4.83 (option 6.7)	1.15	3	1000	19.9	1.96	68.3	1.17
				0.92	4	750	26.5	2.45	91.0	1.32
				0.81	5	600	33.1	1.96	113.8	1.05
				0.72	7	429	46.4	1.40	159.3	0.75

* If kacc < 1, the acceleration torque must be reduced by limiting the current through the drive.

Pjr 0752
Selection

Motor speed 3000 rpm

D+20 lead time (Ex Works)
valid only for Low Backlash MEDIUM

Pjr 0752 $M_{Red\text{-}S1}$ 85 N.m max

Motor type	Motor nominal torque	Motor peak torque	Motor inertia	Gearbox inertia	Exact ratio	Output speed	S1		S5	
							Gearbox nominal torque	Duty factor	Acceleration torque at gearbox	Duty factor at acceleration
	$M_{n\,mot}$	$M_{peak\,mot}$	J_{mot}	J_{red}	I_{exact}	n_2	$M_{n\,red}$	k_{S1}	$M_{acc\,red}$	k_{acc}*
	N.m	N.m	10^{-4} kg.m^2	10^{-4} kg.m^2		rpm	N.m		N.m	
055 UD A 30	0.70	2.88	0.14	0.38	12	250	7.9	10.76	32.5	3.85
				0.38	16	188	10.5	8.07	43.3	2.89
				0.33	20	150	13.2	6.46	54.1	2.31
				0.29	35	86	23.0	3.69	94.8	1.32
				0.27	50	60	32.9	2.58	135	0.92
				0.27	70	43	46.1	1.85	190	0.66
055 UD B 30	1.05	4.72	0.25	0.38	12	250	11.8	7.18	53.2	2.35
				0.38	16	188	15.8	5.38	71.0	1.76
				0.33	20	150	19.7	4.31	88.7	1.41
				0.29	35	86	34.5	2.46	155	0.80
				0.27	50	60	49.4	1.72	222	0.56
				0.27	70	43	69.1	1.23	311	0.40
055 UD C 30	1.48	6.6	0.36	0.38	12	250	16.7	5.09	74.4	1.68
				0.38	16	188	22.3	3.82	99.3	1.26
				0.33	20	150	27.8	3.05	124	1.01
				0.29	35	86	48.7	1.75	217	0.58
				0.27	50	60	69.6	1.22	310	0.40
075 U3 B 30	2.30	8.00	1.22 (option 1.61)	0.38	12	250	25.9	3.28	90.2	1.39
				0.38	16	188	34.6	2.46	120	1.04
				0.33	20	150	43.2	1.97	150	0.83
				0.29	35	86	75.7	1.12	263	0.47
067 UD B 30	2.45	7.65	0.53	0.38	12	250	27.6	3.08	86.3	1.45
				0.38	16	188	36.8	2.31	115	1.09
				0.33	20	150	46.1	1.85	144	0.87
				0.29	35	86	80.6	1.05	252	0.50
067 UD C 30	3.50	11.10	0.75	0.38	12	250	39.5	2.15	125	1.00
				0.38	16	188	52.6	1.61	167	0.75
				0.33	20	150	65.8	1.29	209	0.60

LOW BACKLASH

* If kacc < 1, the acceleration torque must be reduced by limiting the current through the drive.

Pjr 0751
Selection

Motor speed 6000 rpm

LOW BACKLASH

Pjr 0751 $M_{Red\text{-}S1}$ 65 N.m max

Motor type	Motor nominal torque	Motor peak torque	Motor inertia	Gearbox inertia	Exact ratio	Output speed	S1		S5	
							Gearbox nominal torque	Duty factor	Acceleration torque at gearbox	Duty factor at acceleration
	$M_{n\ mot}$	$M_{peak\ mot}$	J_{mot}	J_{red}	I_{exact}	n_2	$M_{n\ red}$	k_{S1}	$M_{acc\ red}$	k_{acc}*
	N.m	N.m	10^{-4} kg.m^2	10^{-4} kg.m^2		rpm	N.m		N.m	
055 UD A 60	0.68	2.88	0.14	1.15	3	2000	2.0	19.91	8.3	9.65
				0.92	4	1500	2.6	24.89	11.1	10.85
				0.81	5	1200	3.3	19.91	13.8	8.68
				0.72	7	857	4.6	14.22	19.4	6.20
				0.67	10	600	6.5	6.13	27.6	3.40
055 UD B 60	0.90	4.72	0.25	1.15	3	2000	2.6	15.05	13.6	5.89
				0.92	4	1500	3.5	18.81	18.1	6.62
				0.81	5	1200	4.3	15.05	22.7	5.30
				0.72	7	857	6.0	10.75	31.7	3.78
				0.67	10	600	8.6	4.63	45.3	2.07
055 UD C 60	1.2	6.6	0.36	1.15	3	2000	3.5	11.28	19.0	4.21
				0.92	4	1500	4.6	14.11	25.3	4.73
				0.81	5	1200	5.8	11.28	31.7	3.79
				0.72	7	857	8.1	8.06	44.4	2.71
				0.67	10	600	11.5	3.47	63.4	1.48
075 U3 B 60	1.90	8.00	1.22 (option 1.61)	1.15	3	2000	5.5	7.13	23.0	3.47
				0.92	4	1500	7.3	8.91	30.7	3.91
				0.81	5	1200	9.1	7.13	38.4	3.13
				0.72	7	857	12.8	5.09	53.8	2.23
				0.67	10	600	18.2	2.19	76.8	1.22
067 UD B 60	2.20	7.65	0.53	1.15	3	2000	6.3	6.16	22.0	3.63
				0.92	4	1500	8.4	7.69	29.4	4.08
				0.81	5	1200	10.6	6.16	36.7	3.27
				0.72	7	857	14.8	4.40	51.4	2.33
				0.67	10	600	21.1	1.89	73.4	1.28
095 U3 B 60	3.20	13.50	2.6 (option 4.5)	1.15	3	2000	9.2	4.23	38.9	2.06
				0.92	4	1500	12.3	5.29	51.8	2.31
				0.81	5	1200	15.4	4.23	64.8	1.85
				0.72	7	857	21.5	3.02	90.7	1.32
				0.67	10	600	30.7	1.30	130	0.73
089 UD B 60	3.80	16.50	1.61	1.15	3	2000	10.9	3.56	47.5	1.68
				0.92	4	1500	14.6	4.45	63.4	1.89
				0.81	5	1200	18.2	3.56	79.2	1.52
				0.72	7	857	25.5	2.55	111	1.08
089 UD C 60	5.00	24.00	2.34	1.15	3	2000	14.4	2.71	69.1	1.16
				0.92	4	1500	19.2	3.39	92.2	1.30
				0.81	5	1200	24.0	2.71	115	1.04
				0.72	7	857	33.6	1.93	161	0.74

The maximum temperature on the housing must not exceed 90°C.

* If kacc < 1, the acceleration torque must be reduced by limiting the current through the drive.

Pjr 0752
Selection

Motor speed 6000 rpm

Pjr 0752 $M_{Red\text{-}S1}$ 85 N.m max

Motor type	Motor nominal torque	Motor peak torque	Motor inertia	Gearbox inertia	Exact ratio	Output speed	S1		S5	
							Gearbox nominal torque	Duty factor	Acceleration torque at gearbox	Duty factor at acceleration
	$M_{n\,mot}$	$M_{peak\,mot}$	J_{mot}	J_{red}	I_{exact}	n_2	$M_{n\,red}$	k_{S1}	$M_{acc\,red}$	k_{acc}*
	N.m	N.m	10^{-4} kg.m^2	10^{-4} kg.m^2		rpm	N.m		N.m	
055 UD A 60	0.68	2.88	0.14	0.38	12	500	7.7	11.08	32.5	3.85
				0.38	16	375	10.2	8.31	43.3	2.89
				0.33	20	300	12.8	6.65	54.1	2.31
				0.29	35	171	22.4	3.80	94.8	1.32
				0.27	50	120	32.0	2.66	135	0.92
				0.27	70	86	44.7	1.90	190	0.66
055 UD B 60	0.90	4.72	0.25	0.38	12	500	10.2	8.37	53.2	2.35
				0.38	16	375	13.5	6.28	71.0	1.76
				0.33	20	300	16.9	5.02	88.7	1.41
				0.29	35	171	29.6	2.87	155	0.80
				0.27	50	120	32.0	2.66	135	0.92
				0.27	70	86	59.2	1.44	311	0.40
055 UD C 60	1.20	6.6	0.36	0.38	12	500	13.5	6.28	74.4	1.68
				0.38	16	375	18.0	4.71	99.3	1.26
				0.33	20	300	22.6	3.77	124	1.01
				0.29	35	171	39.5	2.15	217	0.58
				0.27	50	120	32.0	2.66	135	0.92
				0.27	70	86	79.0	1.08	434	0.29
075 U3 B 60	1.90	8.00	1.22 (option 1.61)	0.38	12	500	21.4	3.97	90.2	1.39
				0.38	16	375	28.6	2.97	120	1.04
				0.33	20	300	35.7	2.38	150	0.83
				0.29	35	171	62.5	1.36	263	0.47
067 UD B 60	2.20	7.65	0.53	0.38	12	500	24.8	3.43	86.3	1.45
				0.38	16	375	33.1	2.57	115	1.09
				0.33	20	300	41.4	2.06	144	0.87
				0.29	35	171	72.4	1.17	252	0.50

The maximum temperature on the housing must not exceed 90°C.

* If kacc < 1, the acceleration torque must be reduced by limiting the current through the drive.

Pjr 1001
Selection

Motor speed 3000 rpm

D+20 lead time (Ex Works)
valid only for Low Backlash MEDIUM

Pjr 1001 M_{Red-S1} 150 N.m max

Motor type	Motor nominal torque	Motor peak torque	Motor inertia	Gearbox inertia	Exact ratio	Output speed	S1		S5	
							Gearbox nominal torque	Duty factor	Acceleration torque at gearbox	Duty factor at acceleration
	$M_{n\,mot}$	$M_{peak\,mot}$	J_{mot}	J_{red}	I_{exact}	n_2	$M_{n\,red}$	k_{S1}	$M_{acc\,red}$	k_{acc}*
	N.m	N.m	10^{-4} kg.m^2	10^{-4} kg.m^2		rpm	N.m		N.m	
095 U3 B 30	4.10	13.50	2.6 (option 4.5)	6.05	3	1000	11.8	9.32	38.9	4.63
				4.05	4	750	15.7	9.53	51.8	4.82
				3.17	5	600	19.7	7.62	64.8	3.86
				2.44	7	429	27.6	5.44	90.7	2.76
				2.08	10	300	39.4	2.92	130	1.54
089 UD B 30	4.85	16.50	1.61	6.05	3	1000	14.0	7.88	47.5	3.79
				4.05	4	750	18.6	8.05	63.4	3.95
				3.17	5	600	23.3	6.44	79.2	3.16
				2.44	7	429	32.6	4.60	111	2.25
				2.08	10	300	46.6	2.47	158	1.26
089 UD C 30	6.90	24.00	2.34	6.05	3	1000	19.9	5.54	69.1	2.60
				4.05	4	750	26.5	5.66	92.2	2.71
				3.17	5	600	33.1	4.53	115	2.17
				2.44	7	429	46.4	3.23	161	1.55
				2.08	10	300	66.2	1.74	230	0.87
095 U3 D 30	6.90	23.70	4.83 (option 6.7)	6.05	3	1000	19.9	5.54	68.3	2.64
				4.05	4	750	26.5	5.66	91.0	2.75
				3.17	5	600	33.1	4.53	114	2.20
				2.44	7	429	46.4	3.23	159	1.57
				2.08	10	300	66.2	1.74	228	0.88
115 UD C 30	10.50	43.80	6.39	6.05	3	1000	30.2	3.64	126	1.43
				4.05	4	750	40.3	3.72	168	1.49
				3.17	5	600	50.4	2.98	210	1.19
				2.44	7	429	70.6	2.13	294	0.85
				2.08	10	300	101	1.14	420	0.48
115 U3 D 30	11.20	41.00	12.5 (option 17.1)	6.05	3	1000	32.3	3.41	118	1.52
				4.05	4	750	43.0	3.49	157	1.59
				3.17	5	600	53.8	2.79	197	1.27
				2.44	7	429	75.3	1.99	276	0.91
				2.08	10	300	108	1.07	394	0.51
115 UD D 30	13.60	56.40	8.38	6.05	3	1000	39.2	2.81	162	1.11
				4.05	4	750	52.2	2.87	217	1.15
				3.17	5	600	65.3	2.30	271	0.92
				2.44	7	429	91.4	1.64	379	0.66

* If kacc < 1, the acceleration torque must be reduced by limiting the current through the drive.

Pjr 1002
Selection

Motor speed 3000 rpm

D+20 lead time (Ex Works)
valid only for Low Backlash MEDIUM

Pjr 1002 $M_{Red\text{-}S1}$ 180 N.m max

Motor type	Motor nominal torque	Motor peak torque	Motor inertia	Gearbox inertia	Exact ratio	Output speed	S1		S5	
							Gearbox nominal torque	Duty factor	Acceleration torque at gearbox	Duty factor at acceleration
	$M_{n\,mot}$	$M_{peak\,mot}$	J_{mot}	J_{red}	I_{exact}	n_2	$M_{n\,red}$	k_{S1}	$M_{acc\,red}$	k_{acc}*
	N.m	N.m	10^{-4} kg.m^2	10^{-4} kg.m^2		rpm	N.m		N.m	
095 U3 B 30	4.10	13.50	2.6 (option 4.5)	1.5	12	250	46.2	3.89	152	1.71
				1.5	16	188	61.7	2.92	203	1.28
				1.29	20	150	77.1	2.34	254	1.02
				1.17	35	86	135	1.33	444	0.59
089 UD B 30	4.85	16.50	1.61	1.5	12	250	54.7	3.29	186	1.40
				1.5	16	188	72.9	2.47	248	1.05
				1.29	20	150	91.2	1.97	310	0.84
				1.17	35	86	160	1.13	543	0.48
089 UD C 30	6.90	24.00	2.34	1.5	12	250	77.8	2.31	271	0.96
				1.5	16	188	104	1.73	361	0.72
				1.29	20	150	130	1.39	451	0.58
095 U3 D 30	6.90	23.7	4.83 (option 6.7)	1.5	12	250	77.8	2.31	267	0.97
				1.5	16	188	104	1.73	356	0.73
				1.29	20	150	130	1.39	446	0.58

LOW BACKLASH

* If kacc < 1, the acceleration torque must be reduced by limiting the current through the drive.

Pjr 1401 - Pjr 1402
Selection

Motor speed 3000 rpm

D+20 lead time (Ex Works)
valid only for Low Backlash MEDIUM

Pjr 1401 $M_{Red\text{-}S1}$ **340 N.m max**

Motor type	Motor nominal torque	Motor peak torque	Motor inertia	Gearbox inertia	Exact ratio	Output speed	S1		S5	
							Gearbox nominal torque	Duty factor	Acceleration torque at gearbox	Duty factor at acceleration
	$M_{n\,mot}$	$M_{peak\,mot}$	J_{mot}	J_{red}	I_{exact}	n_2	$M_{n\,red}$	k_{S1}	$M_{acc\,red}$	k_{acc}*
	N.m	N.m	10^{-4} kg.m^2	10^{-4} kg.m^2		rpm	N.m		N.m	
115 UD C 30	10.50	43.80	6.39	14.25	3	1000	30	6.94	126	3.01
				9.31	4	750	40	8.43	168	3.21
				6.91	5	600	50	6.75	210	2.57
				4.91	7	429	71	4.82	294	1.83
				3.89	10	300	101	2.08	420	1.05
115 U3 D 30	11.20	41.00	12.5 (option 17.1)	14.25	3	1000	32	6.51	118	3.22
				9.31	4	750	43	7.91	157	3.43
				6.91	5	600	54	6.32	197	2.74
				4.91	7	429	75	4.52	276	1.96
				3.89	10	300	108	1.95	394	1.12
115 UD D 30	13.60	56.40	8.38	14.25	3	1000	39	5.36	162	2.34
				9.31	4	750	52	6.51	217	2.49
				6.91	5	600	65	5.21	271	1.99
				4.91	7	429	91	3.72	379	1.42
				3.89	10	300	131	1.61	541	0.81
142 U3 E 30	18.20	75.00	36.9 (option 49.8)	14.25	3	1000	52	4.01	216	1.76
				9.31	4	750	70	4.86	288	1.88
				6.91	5	600	87	3.89	360	1.50
				4.91	7	429	122	2.78	504	1.07
				3.89	10	300	175	1.20	720	0.61
142 UD C 30	18.40	74.90	17.0	14.25	3	1000	53	3.96	216	1.76
				9.31	4	750	71	4.81	288	1.88
				6.91	5	600	88	3.85	360	1.50
				4.91	7	429	124	2.75	503	1.07
				3.89	10	300	177	1.19	719	0.61
142 UD E 30	23.00	114.00	27.2	14.25	3	1000	66	3.17	328	1.16
				9.31	4	750	88	3.85	438	1.23
				6.91	5	600	110	3.08	547	0.99
				4.91	7	429	155	2.20	766	0.70

* If kacc < 1, the acceleration torque must be reduced by limiting the current through the drive.

Pjr 1402
Selection

Motor speed 3000 rpm

D+20 lead time (Ex Works)
valid only for Low Backlash MEDIUM

Pjr 1402 M_{Red-S1} 400 N.m max

Motor type	Motor nominal torque	Motor peak torque	Motor inertia	Gearbox inertia	Exact ratio	Output speed	S1		S5	
							Gearbox nominal torque	Duty factor	Acceleration torque at gearbox	Duty factor at acceleration
	$M_{n\,mot}$	$M_{peak\,mot}$	J_{mot}	J_{red}	I_{exact}	n_2	$M_{n\,red}$	k_{S1}	$M_{acc\,red}$	k_{acc}*
	N.m	N.m	10^{-4} kg.m^2	10^{-4} kg.m^2		rpm	N.m		N.m	
115 UD C 30	10.50	43.80	6.39	3.71	12	250	118	3.38	494	1.11
				3.71	16	188	158	2.53	659	0.83
				2.82	20	150	197	2.03	823	0.7
				2.15	35	86	345	1.16	1441	0.38
115 U3 D 30	11.20	41.00	12.5 (option 17.1)	3.71	12	250	126	3.17	462	1.19
				3.71	16	188	168	2.37	617	0.89
				2.82	20	150	211	1.90	771	0.7
				2.15	35	86	368	1.09	1349	0.41
115 UD D 30	13.60	56.40	8.38	3.71	12	250	153	2.61	636	0.86
				3.71	16	188	205	1.96	848	0.65
				2.82	20	150	256	1.56	1060	0.5
142 U3 E 30	18.20	75.00	36.9 (option 49.8)	3.71	12	250	205	1.95	846	0.65
				3.71	16	188	274	1.46	1128	0.49
				2.82	20	150	342	1.17	1410	0.4
142 UD C 30	18.40	74.90	17.0	3.71	12	250	208	1.93	845	0.65
				3.71	16	188	277	1.45	1126	0.49
				2.82	20	150	346	1.16	1408	0.39
142 UD E 30	23.00	114.00	27.2	3.71	12	250	259	1.54	1286	0.43
				3.71	16	188	346	1.16	1715	0.32

LOW BACKLASH

* If kacc < 1, the acceleration torque must be reduced by limiting the current through the drive.

Pjr 1801 - Pjr 1802
Selection
Motor speed 3000 rpm / 2000 rpm for 190 UD C 20

D+20 lead time (Ex Works)
valid only for Low Backlash MEDIUM

Pjr 1801 $M_{Red\text{-}S1}$ 600 N.m max

Motor type	Motor nominal torque	Motor peak torque	Motor inertia	Gearbox inertia	Exact ratio	Output speed	S1		S5	
							Gearbox nominal torque	Duty factor	Acceleration torque at gearbox	Duty factor at acceleration
	$M_{n\,mot}$	$M_{peak\,mot}$	J_{mot}	J_{red}	I_{exact}	n_2	$M_{n\,red}$	k_{S1}	$M_{acc\,red}$	k_{acc}*
	N.m	N.m	10^{-4} kg.m²	10^{-4} kg.m²		rpm	N.m		N.m	
142 U3 E 30	18.2	75	36.9 (option 49.8)	53	3	1000	52	11.45	216	5.56
				39	4	750	70	8.59	288	4.51
				34	5	600	87	6.87	360	3.61
				31	7	429	122	4.91	504	2.58
				29	10	300	175	3.43	720	1.67
142 UD C 30	18.40	74.90	17.0	53	3	1000	53	11.32	216	5.56
				39	4	750	71	8.49	288	4.52
				34	5	600	88	6.79	360	3.62
				31	7	429	124	4.85	503	2.58
				29	10	300	177	3.40	719	1.67
142 UD E 30	23.00	114.00	27.2	53	3	1000	66	9.06	328	3.65
				39	4	750	88	6.79	438	2.97
				34	5	600	110	5.43	547	2.38
				31	7	429	155	3.88	766	1.70
				29	10	300	221	2.72	1094	1.10
190 U3 D 30	26.5	133.5	86.8 (option 125.3)	53	3	1000	76	7.86	384	3.12
				39	4	750	102	5.90	513	2.54
				34	5	600	127	4.72	641	2.03
				31	7	429	178	3.37	897	1.45
				29	10	300	254	2.36	1282	0.94
190 UD C 20	42.50	156.00	54.6	53	3	667	122	4.90	449	2.67
				39	4	500	163	3.68	599	2.17
				34	5	400	204	2.94	749	1.74
				31	7	286	286	2.10	1048	1.24
				29	10	200	408	1.47	1498	0.80

Pjr 1802 $M_{Red\text{-}S1}$ 600 N.m max

Motor type	Motor nominal torque	Motor peak torque	Motor inertia	Gearbox inertia	Exact ratio	Output speed	S1		S5	
							Gearbox nominal torque	Duty factor	Acceleration torque at gearbox	Duty factor at acceleration
	$M_{n\,mot}$	$M_{peak\,mot}$	J_{mot}	J_{red}	I_{exact}	n_2	$M_{n\,red}$	k_{S1}	$M_{acc\,red}$	k_{acc}*
	N.m	N.m	10^{-4} kg.m²	10^{-4} kg.m²		rpm	N.m		N.m	
142 U3 E 30	18.2	75	36.9 (option 49.8)	6	12	250	205	2.92	846	1.54
				6	16	188	274	2.19	1128	1.15
				5	20	150	342	1.75	1410	0.92
				5	35	86	599	1.00	2468	0.53
142 UD C 30	18.40	74.90	17.0	6	12	250	208	2.89	845	1.54
				6	16	188	277	2.17	1126	1.15
				5	20	150	346	1.73	1408	0.92
				5	35	86	605	1.0	2464	0.53
142 UD E 30	23.00	114.00	27.2	6	12	250	259	2.31	1286	1.01
				6	16	188	346	1.73	1715	0.76
				5	20	150	432	1.39	2143	0.61
190 U3 D 30	26.5	133.5	86.8 (option 125.3)	6	12	167	299	2.0	1506	0.86
				6	16	125	399	1.51	2008	0.65
190 UD C 20	42.5	156	54.6	6	12	167	479	1.25	1760	0.74
				6	16	125	639	0.94	2346	0.55

* If kacc < 1, the acceleration torque must be reduced by limiting the current through the drive.

Pjr Dynabloc Servo gearbox
Dimensions - Flange with through holes BS

Pjr 0601 to Pjr 1802 - Universal mounting MU-FF

Dimensions in mm

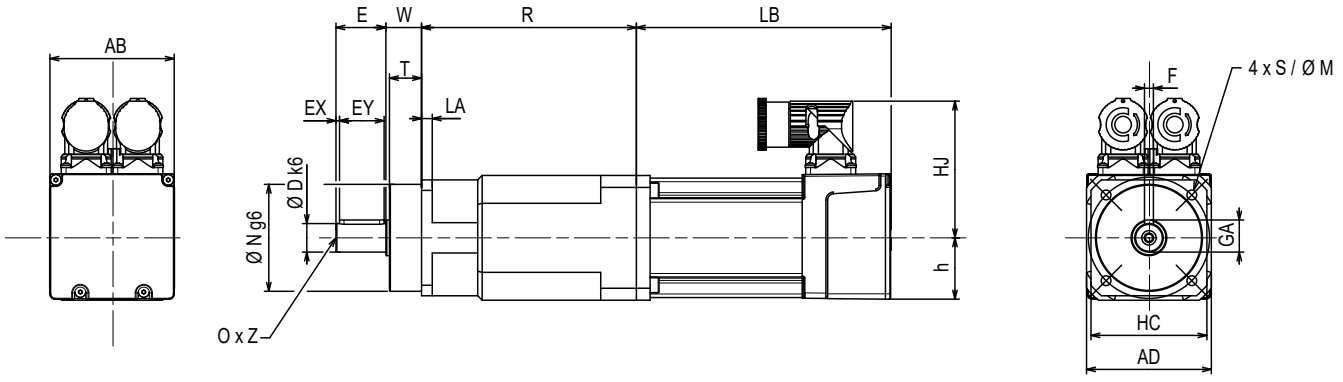

Type 1-stage / 2-stage	Gearbox								
	HC	AD	M	N	LA	S	T	W	Weight kg
Pjr 0601 / 0602	65	70	68	60	6	5.5	18	20	2.1 / 3.3
Pjr 0751 / 0752	76	81	85	70	7	6.6	18	20	3.7 / 4.2
Pjr 1001 / 1002	101	106	120	90	10	9	28	30	7.2 / 9.5
Pjr 1401 / 1402	141	146	165	130	12	11	27	30	19.3 / 23.3
Pjr 1801 / 1802	180	200	215	160	14	13	10	14	32 / 36.6

Solid output shaft							
D	E	F	GA	EY	EX	O	Z
16	28	5	18	25	2	M5	12
22	36	6	24.5	32	2	M8	19
32	58	10	35	50	4	M12	26
40	82	12	43	70	6	M16	36
55	82	16	60	70	6	M20	42

Motor type		Unimotor						
		Without brake		With brake				
		LB	Weight kg	LB	Weight kg	AB	HJ	h
Unimotor hd	055 UD A	118	1.2	158	1.6	55	72	27.5
	055 UD B	142	1.5	182	1.9	55	72	27.5
	055 UD C	166	1.8	206	2.2	55	72	27.5
	067 UD B	173	2.6	208	3.3	70	77	35
	067 UD C	203	3.2	238	3.9	70	77	35
	089 UD B	191	4.4	231	5.4	91	85	45.5
	089 UD C	221	5.5	261	6.5	91	85	45.5
	115 UD C	237	8.9	274	10.4	116	99	58
	115 UD D	267	10.7	304	12.2	116	99	58
	142 UD C	217	11.5	283	14.3	142	113	71
	142 UD E	277	18.5	343	21.3	142	113	71
	190 UD C	221	23.5	320	28.8	191	158	95
Unimotor fm	075 U3 B	239	3.7	269	4.2	75	89	37.5
	095 U3 B	257	5.8	287	6.4	90	94	45
	095 U3 D	317	8.2	347	8.8	90	94	45
	115 U3 D	337	12.6	367	13.8	115	99	57.5
	142 U3 E	313	20.7	373	22.5	142	113	71
	190 U3 D	290	28.8	380	33.3	190	158	95

Gearbox type									
Pjr									
0601	0602	0751	0752	1001	1002	1401	1402	1801	1802
R									
88	120	99	130	-	-	-	-	-	-
88	120	99	130	-	-	-	-	-	-
88	120	99	130	-	-	-	-	-	-
88	-	99	130	-	-	-	-	-	-
88	-	99	130	-	-	-	-	-	-
-	-	109	-	129	153	-	-	-	-
-	-	109	-	129	153	-	-	-	-
-	-	-	-	129	-	150	220	-	-
-	-	-	-	129	-	150	220	-	-
-	-	-	-	-	-	160	230	196	218
-	-	-	-	-	-	160	230	196	218
-	-	-	-	-	-	-	-	216	238
88	-	99	130	-	-	-	-	-	-
-	-	109	-	129	153	-	-	-	-
-	-	109	-	129	153	-	-	-	-
-	-	-	-	129	-	150	220	-	-
-	-	-	-	-	-	160	230	196	218
-	-	-	-	-	-	-	-	216	238

Max. length depending on the feedback

Mjd Dynabloc Servo gearbox
General

Mjd Dynabloc

• A high efficiency and precision worm solution

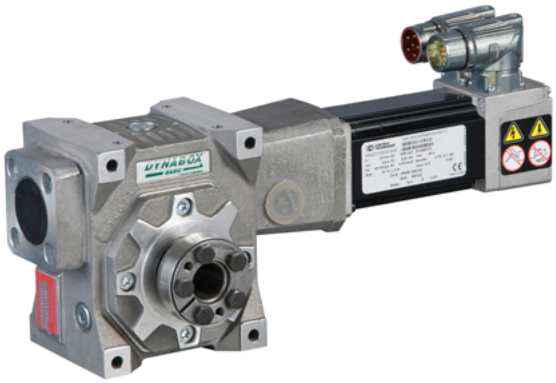

- **Very low backlash**
- **Very high torsional stiffness**
- **High efficiency worm**
- **Space-saving right angle design**
- **Quiet operation**
- **Unimotor fm or hd**

Mjd Dynabloc servo gearboxes are designed to reduce the speed and increase the torque of servo motors and to optimize the ratio of inertia between the driven load and the motor.

Mjd Dynabloc gearboxes are the perfect solution for high precision applications. The high efficiency worm gear provides very low backlash and very high torsional stiffness with quiet operation. The gearboxes also offer multiple possibilities of mounting helping to save space and facilitate easy integration:

- Compact right angle design
- Fixing possible on four sides as standard.
- Solid output shaft single or double or hollow shaft keyed or with shrink disc.

Maintenance-free, the gearboxes are supplied lubricated.

Mjd Dynabloc gearboxes are available with Unimotor fm motors for continuous duty applications with high inertia loads or Unimotor hd motors for pulse duty applications requiring high dynamics. Standard motor speed is 3000 rpm, a motor speed of 6000 rpm is available on demand.

Description	
Range	7 sizes from 035 to 110
Nominal torque	23 - 688 N.m
Max acceleration torque	Up to 1100 N.m
Gearbox ratio	Ratios from 5.2 to 90
Backlash	BASIC: 10′ MEDIUM: 5′ EXPERT: ≤ 1′
Lubrication	Life lubricated
Efficiency	Depending on ratio (see chapter Mjd Technical characteristics, page 41)
Output shaft	Plain shaft with key, simple or double • Tolerance h6, threaded hole acc. to DIN 332 DR form Keyed hollow shaft or unkeyed with shrink disk • Tolerance of diameter: H7
Unimotor hd Unimotor fm	Nominal speed 3000 rpm (except 190 UD) Connectors rotatable by 90° Incremental or absolute encoder Motor with or without brake Universal mounting with servo coupling
Finish	Painted (RAL 9005 black) and unpainted aluminium

Mjd Dynabloc Servo gearbox
Technical characteristics

Gearbox type	Exact ratio	Efficiency	Torsional stiffness	Angular backlash			Max. radial load F_r at E/2	Max. axial load F_a
				arcmin				
			N.m/arcmin	BASIC	MEDIUM	EXPERT	N	N
Mjd 0351	5.2	0.92	5	< 10	< 5	< 1	3800	2800
	7.25	0.90						
	10.25	0.88						
	14.5	0.83						
	19.5	0.80						
	30	0.72						
	45	0.65						
Mjd 0451	5.2	0.93	9	< 10	< 5	< 1	5800	4000
	7.25	0.92						
	10.25	0.91						
	14.5	0.87						
	19.5	0.86						
	30	0.78						
	45	0.72						
	60	0.68						
	90	0.59						
Mjd 0551	5.2	0.94	20	< 10	< 5	< 1	7000	4800
	7.25	0.92						
	10.25	0.89						
	14.5	0.87						
	19.5	0.85						
	30	0.78						
	45	0.72						
Mjd 0631	5.2	0.94	36	< 10	< 5	< 1	8800	8500
	7.25	0.93						
	10.25	0.92						
	14.5	0.89						
	19.5	0.87						
	30	0.80						
	45	0.75						
	60	0.71						
Mjd 0751	5.2	0.94	50	< 10	< 5	< 1	10500	10500
	7.25	0.93						
	10.25	0.92						
	14.5	0.89						
	19.5	0.87						
	30	0.82						
	45	0.74						
Mjd 0901	5.2	0.95	75	< 10	< 5	< 1	15800	13000
	7.25	0.95						
	10.25	0.93						
	14.5	0.90						
	19.5	0.88						
	30	0.82						
	45	0.79						
	60	0.75						
	90	0.68						
Mjd 1101	5.2	0.95	120	< 10	< 5	< 1	21500	16000
	7.25	0.95						
	10.25	0.93						
	14.5	0.91						
	19.5	0.90						
	30	0.85						
	45	0.80						
	60	0.77						

Mjd Dynabloc Servo gearbox
Mounting form - Operating position

Mounting form

Mounting with flange with tapped holes

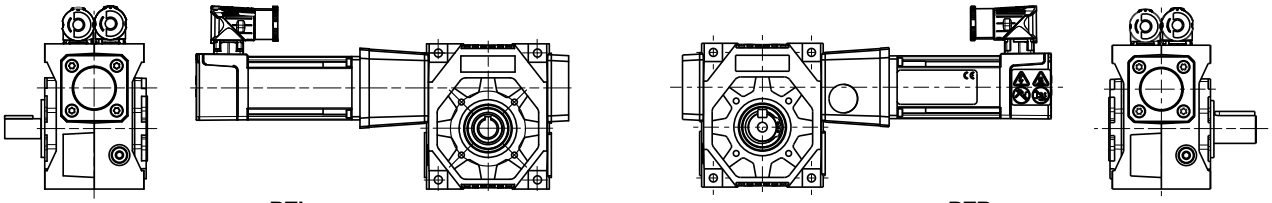

BTL
Tapped holes on left face

or

BTR
Tapped holes on right face

Output shaft

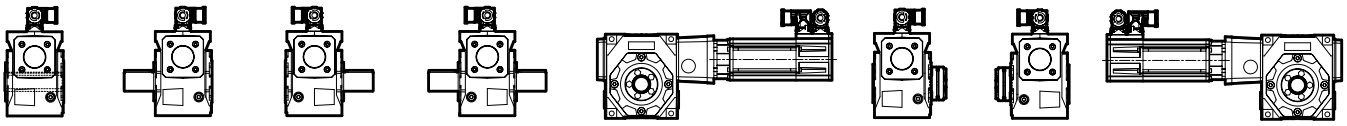

H
Hollow shaft
+ keyway

L
Solid shaft
left

R
Solid shaft
right

LR
Solid shaft
left and right

SDR
Shrink disk right

SDL
Shrink disk left

Operating position

Mounting with flange with tapped holes **BT**

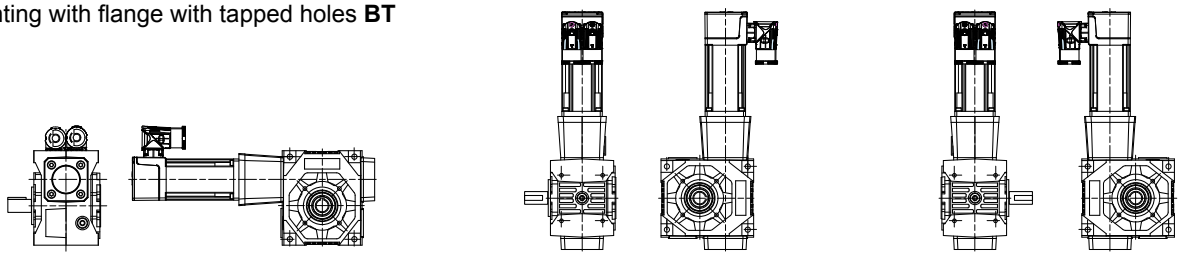

B14

V18

V19

Connector position

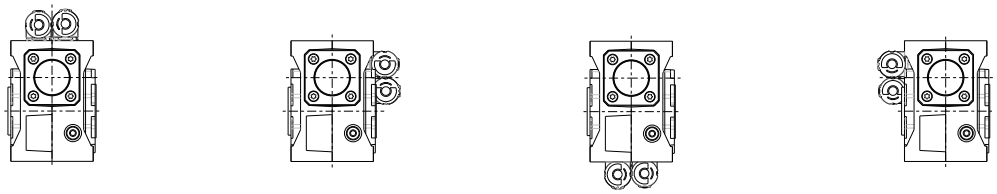

A : Standard

B

C

D

Mjd Dynabloc Servo gearbox
Ordering code information

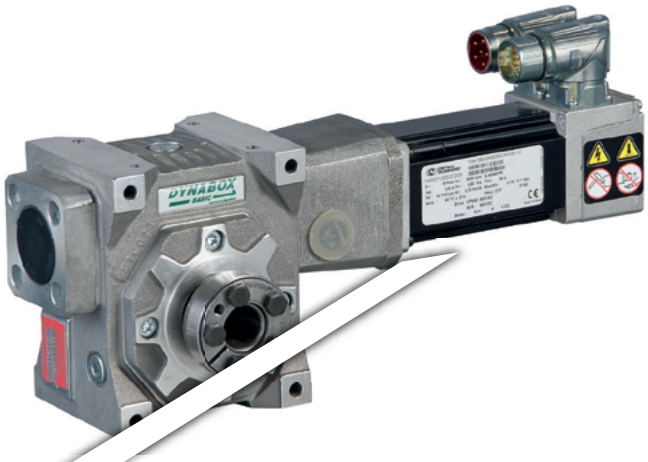

Gearbox

Mjd	1101	B14	BT	L	L	19.5	MEDIUM	MU-FF
Gearbox type	Size **0351, 0451, 0551, 0631, 0751, 0901, 1101**	Operating position **B14, V18, V19**	Mounting form **BT**	Mounting position **L - R**	Output shaft **H, L, R, LR, SDL, SDR**	Exact ratio **5.25 - 90**	Backlash at output shaft **BASIC - MEDIUM - EXPERT**	Motor input type **MU-FF**

Motor: Unimotor hd and fm

089	UD	B	30	0	B	A	CA	A
Unimotor hd **055, 067, 089, 115, 142** Unimotor fm **075, 095, 115, 142**	Unimotor hd voltage **UD** = 400 V **ED** = 220 V Unimotor fm voltage **U3** = 400 V **E3** = 220 V	Stator length **A, B, C, D, E**	Nominal speed* **30** = 3000 rpm **60** = 6000 rpm	Brake 24 V **0** = Without brake **5** = Parking brake	Connection type* **B** = Power and Signal 90° rotatable (**J** = for Motor 142 UD)	Output shaft **Size 055:** **A** = With key **Sizes 067 - 142:** **E** = With half-key	Feedback device See Servo Drives and Motors technical catalogue	Inertia **A** = std **B** = High inertia (Unimotor fm only)

**For the full range of motor options, please refer to the Servo Drives and Motors Technical Catalogue*

We reserve the right to modify the design, technical specifications and dimensions of the products shown in this document.
The description cannot in any way be considered contractual.

Mjd 0351
Selection

Motor speed 3000 rpm

D+20 lead time (Ex Works)
valid only for Low Backlash MEDIUM

Mjd 0351 $M_{Red\text{-}S1}$ 25 N.m max

Motor type	Motor nominal torque	Motor peak torque	Motor inertia	Gearbox inertia	Exact ratio	Output speed	S1		S5	
							Gearbox nominal torque	Duty factor	Acceleration torque at gearbox	Duty factor at acceleration
	$M_{n\,mot}$	$M_{peak\,mot}$	J_{mot}	J_{red}	I_{exact}	n_2	$M_{n\,red}$	k_{S1}	$M_{acc\,red}$	k_{acc}*
	N.m	N.m	10^{-4} kg.m^2	10^{-4} kg.m^2		rpm	N.m		N.m	
055 UD A 30	0.70	2.88	0.14	0.174	5.2	577	3.3	5.38	13.8	2.25
				0.156	7.25	414	4.6	4.16	18.8	1.70
				0.150	10.25	293	6.3	3.17	26.0	1.31
				0.144	14.5	207	8.4	2.61	34.7	1.01
				0.142	19.5	154	10.9	2.01	44.9	0.78
				0.140	30	100	15.1	1.65	62.2	0.64
				0.139	45	67	20.5	1.22	84.2	0.47
055 UD B 30	1.05	4.72	0.25	0.174	5.2	577	5.0	3.58	22.6	1.37
				0.156	7.25	414	6.9	2.77	30.8	1.04
				0.150	10.25	293	9.5	2.11	42.6	0.80
				0.144	14.5	207	12.6	1.74	56.8	0.62
				0.142	19.5	154	16.4	1.34	73.6	0.48
055 UD C 30	1.48	6.60	0.36	0.174	5.2	577	7.1	2.54	31.6	0.98
				0.156	7.25	414	9.7	1.97	43.1	0.74
				0.150	10.25	293	13.3	1.50	59.5	0.57
				0.144	14.5	207	17.8	1.24	79.4	0.44
075 U3 B 30	2.30	8.00	1.22 (option 1.61)	0.274	5.2	577	11.0	1.64	38.3	0.81
				0.256	7.25	414	15.0	1.27	52.2	0.61
				0.250	10.25	293	20.7	1.00	72.2	0.47
067 UD B 30	2.45	7.65	0.53	0.274	5.2	577	11.7	1.54	36.6	0.85
				0.256	7.25	414	16.0	1.19	49.9	0.64

* If kacc < 1, the acceleration torque must be reduced by limiting the current through the drive.

Mjd 0451
Selection

Motor speed 3000 rpm

D+20 lead time (Ex Works)
valid only for Low Backlash MEDIUM

Mjd 0451 M_{Red-S1} 61 N.m max

Motor type	Motor nominal torque	Motor peak torque	Motor inertia	Gearbox inertia	Exact ratio	Output speed	S1		S5	
							Gearbox nominal torque	Duty factor	Acceleration torque at gearbox	Duty factor at acceleration
	$M_{n\,mot}$	$M_{peak\,mot}$	J_{mot}	J_{red}	I_{exact}	n_2	$M_{n\,red}$	k_{S1}	$M_{acc\,red}$	k_{acc}*
	N.m	N.m	10^{-4} kg.m^2	10^{-4} kg.m^2		rpm	N.m		N.m	
055 UD A 30	0.70	2.88	0.14	0.350	5.2	577	3.4	12.11	13.9	5.03
				0.320	7.25	414	4.7	10.28	19.2	4.16
				0.250	10.25	293	6.5	8.12	26.9	3.16
				0.240	14.5	207	8.8	6.68	36.3	2.59
				0.200	19.5	154	11.7	4.69	48.3	1.82
				0.200	30	100	16.4	3.72	67.4	1.45
				0.182	45	67	22.7	2.60	93.3	1.01
				0.173	60	50	28.6	1.93	118	0.73
				0.146	90	33	37.2	1.35	153	0.50
055 UD B 30	1.05	4.72	0.25	0.350	5.2	577	5.1	8.07	22.8	3.07
				0.320	7.25	414	7.0	6.85	31.5	2.54
				0.250	10.25	293	9.8	5.41	44.0	1.93
				0.240	14.5	207	13.2	4.45	59.5	1.58
				0.200	19.5	154	17.6	3.12	79.2	1.11
				0.200	30	100	24.6	2.48	110	0.89
				0.182	45	67	34.0	1.73	153	0.61
				0.173	60	50	42.8	1.28	193	0.45
055 UD C 30	1.48	6.6	0.36	0.350	5.2	577	7.2	5.73	31.9	2.19
				0.320	7.25	414	9.9	4.86	44.0	1.82
				0.250	10.25	293	13.8	3.84	61.6	1.38
				0.240	14.5	207	18.7	3.16	83.3	1.13
				0.200	19.5	154	24.8	2.22	111	0.80
				0.200	30	100	34.6	1.76	154	0.63
				0.182	45	67	48.0	1.23	214	0.44
075 U3 B 30	2.30	8.00	1.22 (option 1.61)	0.274	5.2	577	11.0	1.64	38.3	0.81
				0.256	7.25	414	15.0	1.27	52.2	0.61
				0.350	10.25	293	21.5	2.47	74.6	1.14
				0.340	14.5	207	29.0	2.03	101	0.93
				0.300	19.5	154	38.6	1.43	134	0.66
				0.300	30	100	53.8	1.13	187	0.52
067 UD B 30	2.45	7.65	0.53	0.450	5.2	577	11.8	3.46	37.0	1.89
				0.420	7.25	414	16.3	2.94	51.0	1.57
				0.350	10.25	293	22.9	2.32	71.4	1.19
				0.340	14.5	207	30.9	1.91	96.5	0.97
				0.300	19.5	154	41.1	1.34	128	0.69
				0.300	30	100	57.3	1.06	179	0.55
067 UD C 30	3.50	11.10	0.75	0.450	5.2	577	16.9	2.42	53.7	1.30
				0.420	7.25	414	23.3	2.06	74.0	1.08
				0.350	10.25	293	32.6	1.62	104	0.82
				0.340	14.5	207	44.2	1.34	140	0.67
095 U3 B 30	4.10	13.50	2.6 (option 4.5)	1.150	5.2	577	19.8	2.07	65.3	1.07
				1.120	7.25	414	27.3	1.76	90.0	0.89
				1.050	10.25	293	38.2	1.39	126	0.68
				1.040	14.5	207	51.7	1.14	170	0.55
089 UD B 30	4.85	16.50	1.61	1.150	5.2	577	23.5	1.75	79.8	0.88
				1.120	7.25	414	32.3	1.48	110	0.73
				1.050	10.25	293	45.2	1.17	154	0.55
089 UD C 30	6.90	24.00	2.34	1.150	5.2	577	33.4	1.23	116	0.60
				1.120	7.25	414	46.0	1.04	160	0.50
095 U3 D 30	6.90	23.70	4.83 (option 6.7)	1.150	5.2	577	33.4	1.23	115	0.61
				1.120	7.25	414	46.0	1.04	160	0.50

* If kacc < 1, the acceleration torque must be reduced by limiting the current through the drive.

Mjd 0551
Selection

Motor speed 3000 rpm

D+20 lead time (Ex Works)
valid only for Low Backlash MEDIUM

Mjd 0551 $M_{Red\text{-}S1}$ 94 N.m max

Motor type	Motor nominal torque	Motor peak torque	Motor inertia	Gearbox inertia	Exact ratio	Output speed	S1		S5	
							Gearbox nominal torque	Duty factor	Acceleration torque at gearbox	Duty factor at acceleration
	$M_{n\,mot}$	$M_{peak\,mot}$	J_{mot}	J_{red}	I_{exact}	n_2	$M_{n\,red}$	k_{S1}	$M_{acc\,red}$	k_{acc}*
	N.m	N.m	10^{-4} kg.m^2	10^{-4} kg.m^2		rpm	N.m		N.m	
075 U3 B 30	2.30	8.00	1.22 (option 1.61)	0.95	5.2	577	11.2	6.05	39.1	2.97
				0.73	7.25	414	15.3	4.82	53.4	2.34
				0.65	10.25	293	21.0	4.15	73.0	1.99
				0.58	14.5	207	29.0	2.83	101	1.32
				0.51	19.5	154	38.1	2.28	133	1.05
				0.54	30	100	53.8	1.75	187	0.79
				0.48	45	67	74.5	1.25	259	0.56
067 UD B 30	2.45	7.65	0.53	0.95	5.2	577	12.0	5.68	37.4	3.10
				0.73	7.25	414	16.3	4.53	51.0	2.45
				0.65	10.25	293	22.4	3.89	69.8	2.08
				0.58	14.5	207	30.9	2.65	96.5	1.38
				0.51	19.5	154	40.6	2.14	127	1.10
				0.54	30	100	57.3	1.64	179	0.83
				0.48	45	67	79.4	1.17	248	0.59
067 UD C 30	3.50	11.10	0.75	0.95	5.2	577	17.1	3.97	54.3	2.14
				0.73	7.25	414	23.3	3.17	74.0	1.69
				0.65	10.25	293	31.9	2.72	101	1.43
				0.58	14.5	207	44.2	1.86	140	0.95
				0.51	19.5	154	58.0	1.50	184	0.76
				0.54	30	100	81.9	1.15	260	0.57
095 U3 B 30	4.10	13.50	2.6 (option 4.5)	1.65	5.2	577	20.0	3.39	66.0	1.76
				1.43	7.25	414	27.3	2.71	90.0	1.39
				1.35	10.25	293	37.4	2.33	123	1.18
				1.28	14.5	207	51.7	1.59	170	0.78
				1.21	19.5	154	68.0	1.28	224	0.62
				1.23	30	100	95.9	1.00	316	0.47
089 UD B 30	4.85	16.50	1.61	1.65	5.2	577	23.7	2.87	80.7	1.44
				1.43	7.25	414	32.3	2.29	110	1.14
				1.35	10.25	293	44.2	1.97	151	0.96
				1.28	14.5	207	61.2	1.34	208	0.64
				1.21	19.5	154	80.4	1.08	273	0.51
089 UD C 30	6.90	24.00	2.34	1.65	5.2	577	33.7	2.02	117	0.99
				1.43	7.25	414	46.0	1.61	160	0.78
				1.35	10.25	293	62.9	1.38	219	0.66
095 U3 D 30	6.90	23.70	4.83 (option 6.7)	1.65	5.2	577	33.7	2.02	116	1.00
				1.43	7.25	414	46.0	1.61	158	0.79
				1.35	10.25	293	62.9	1.38	216	0.67

* If kacc < 1, the acceleration torque must be reduced by limiting the current through the drive.

Mjd 0631
Selection

Motor speed 3000 rpm

D+20 lead time (Ex Works)
valid only for Low Backlash MEDIUM

Mjd 0631 M_{Red-S1} 155 N.m max

Motor type	Motor nominal torque	Motor peak torque	Motor inertia	Gearbox inertia	Exact ratio	Output speed	S1		S5	
							Gearbox nominal torque	Duty factor	Acceleration torque at gearbox	Duty factor at acceleration
	$M_{n\,mot}$	$M_{peak\,mot}$	J_{mot}	J_{red}	I_{exact}	n_2	$M_{n\,red}$	k_{S1}	$M_{acc\,red}$	k_{acc}*
	N.m	N.m	10^{-4} kg.m^2	10^{-4} kg.m^2		rpm	N.m		N.m	
075 U3 B 30	2.30	8.00	1.22 (option 1.61)	1.80	5.2	577	11.2	9.34	39.1	4.58
				1.10	7.25	414	15.5	6.64	53.9	3.23
				1.00	10.25	293	21.7	5.44	75.4	2.57
				0.89	14.5	207	29.7	4.31	103	2.01
				0.75	19.5	154	39.0	3.46	136	1.58
				0.79	30	100	55.2	2.81	192	1.28
				0.70	45	67	77.6	1.76	270	0.79
				0.67	60	50	98.0	1.37	341	0.60
067 UD B 30	2.45	7.65	0.53	1.80	5.20	577	12.0	8.77	37.4	4.79
				1.10	7.25	414	16.5	6.24	51.6	3.37
				1.00	10.25	293	23.1	5.11	72.1	2.69
				0.89	14.5	207	31.6	4.05	98.7	2.10
				0.75	19.5	154	41.6	3.25	129.8	1.66
				0.79	30	100	58.8	2.64	183.6	1.33
				0.70	45	67	82.7	1.66	258.2	0.83
				0.67	60	50	104.4	1.28	325.9	0.63
067 UD C 30	3.50	11.1	0.75	1.80	5.20	577	17.1	6.14	54.3	3.30
				1.10	7.25	414	23.6	4.36	74.8	2.32
				1.00	10.25	293	33.0	3.58	104.7	1.85
				0.89	14.5	207	45.2	2.83	143.2	1.45
				0.75	19.5	154	59.4	2.27	188.3	1.14
				0.79	30	100	84.0	1.85	266.4	0.92
				0.70	45	67	118.1	1.16	374.6	0.57
095 U3 B 30	4.10	13.5	2.6 (option 4.5)	2.50	5.2	577	20.0	5.24	66.0	2.71
				1.80	1.25	414	27.6	3.73	91.0	1.91
				1.70	10.25	293	38.7	3.05	127	1.52
				1.59	14.5	207	52.9	2.42	174	1.19
				1.45	19.5	154	69.6	1.94	229	0.94
				1.49	30	100	98.4	1.58	324	0.76
				1.40	45	67	138	1.00	456	0.47
089 UD B 30	4.85	16.5	1.61	2.50	5.20	577	23.7	4.43	80.7	2.22
				1.80	7.25	414	32.7	3.15	111.3	1.56
				1.70	10.25	293	45.7	2.58	155.6	1.25
				1.59	14.5	207	62.6	2.05	212.9	0.97
				1.45	19.5	154	82.3	1.64	279.9	0.77
				1.49	30	100	116.4	1.33	396.0	0.62
089 UD C 30	6.90	24.0	2.34	2.50	5.20	577	33.7	3.11	117.3	1.53
				1.80	7.25	414	46.5	2.21	161.8	1.08
				1.70	10.25	293	65.1	1.81	226.3	0.86
				1.59	14.5	207	89.0	1.44	309.7	0.67
				1.45	19.5	154	117.1	1.15	407.2	0.53
095 U3 D 30	6.90	23.70	4.83 (option 6.7)	4.60	5.2	577	34	3.11	116	1.55
				3.40	7.25	414	47	2.21	160	1.09
				3.10	10.25	293	65	1.81	223	0.87
				2.80	14.5	207	89	1.44	306	0.68
				2.40	19.5	154	117	1.15	402	0.53

LOW BACKLASH

* If kacc < 1, the acceleration torque must be reduced by limiting the current through the drive.

Mjd 0751
Selection

Motor speed 3000 rpm

D+20 lead time (Ex Works)
valid only for Low Backlash MEDIUM

Mjd 0751 $M_{Red\text{-}S1}$ 212 N.m max

Motor type	Motor nominal torque	Motor peak torque	Motor inertia	Gearbox inertia	Exact ratio	Output speed	S1		S5	
							Gearbox nominal torque	Duty factor	Acceleration torque at gearbox	Duty factor at acceleration
	$M_{n\,mot}$	$M_{peak\,mot}$	J_{mot}	J_{red}	I_{exact}	n_2	$M_{n\,red}$	k_{S1}	$M_{acc\,red}$	k_{acc}*
	N.m	N.m	10^{-4} kg.m^2	10^{-4} kg.m^2		rpm	N.m		N.m	
095 U3 B 30	4.10	13.50	2.6 (option 4.5)	4.60	5.2	577	20.0	8.68	66.0	4.49
				3.40	7.25	414	27.6	5.82	91.0	2.97
				3.10	10.25	293	38.7	4.35	127	2.11
				2.80	14.5	207	52.3	3.73	172	1.83
				2.40	19.5	154	69.6	2.79	229	1.35
				2.50	30	100	101	2.10	332	1.01
				2.30	45	67	137	1.55	450	0.74
				2.20	60	50	170	1.15	559	0.54
089 UD B 30	4.85	16.50	1.61	4.60	5.2	577	23.7	7.34	80.7	3.67
				3.40	7.25	414	32.7	4.92	111	2.43
				3.10	10.25	293	45.7	3.67	156	1.73
				2.80	14.5	207	61.9	3.15	211	1.50
				2.40	19.5	154	82.3	2.36	280	1.11
				2.50	30	100	119	1.78	406	0.82
089 UD C 30	6.90	24.00	2.34	4.60	5.2	577	34	5.16	117	2.52
				3.40	7.25	414	47	3.46	162	1.67
				3.10	10.25	293	65	2.58	226	1.19
				2.80	14.5	207	88	2.21	306	1.03
				2.40	19.5	154	117	1.66	407	0.76
				2.50	30	100	170	1.25	590	0.57
095 U3 D 30	6.90	23.70	4.83 (option 6.7)	4.60	5.2	577	33.7	5.16	116	2.56
				3.40	7.25	414	46.5	3.46	160	1.69
				3.10	10.25	293	65.1	2.58	223	1.20
				2.80	14.5	207	88.0	2.21	302	1.04
				2.40	19.5	154	117	1.66	402	0.77
				2.50	30	100	170	1.25	583	0.57
115 UD C 30	10.50	43.80	6.39	5.50	5.2	577	51.3	3.39	214	1.38
				4.30	7.25	414	70.8	2.27	295	0.91
				4.00	10.25	293	99.0	1.70	413	0.65
				3.70	14.5	207	134	1.46	559	0.56
				3.30	19.5	154	178	1.09	743	0.42
115 U3 D 30	11.20	41.00	12.5 (option 17.1)	5.50	5.2	577	54.7	3.18	200	1.48
				4.30	7.25	414	75.5	2.13	276	0.98
				4.00	10.25	293	106	1.59	387	0.70
				3.70	14.5	207	143	1.36	523	0.60
				3.30	19.5	154	190	1.02	696	0.45
115 UD D 30	13.60	56.40	8.38	5.50	5.20	576.92	66	2.62	276	1.07
				4.30	7.25	413.79	92	1.76	380	0.71
				4.00	10.25	292.68	128	1.31	532	0.51
				3.70	14.50	206.90	174	1.12	720	0.44

* If kacc < 1, the acceleration torque must be reduced by limiting the current through the drive.

Mjd 0901
Selection

Motor speed 3000 rpm

Mjd 0901 M_{Red-S1} 385 N.m max

D+20 lead time (Ex Works)
valid only for Low Backlash MEDIUM

Motor type	Motor nominal torque	Motor peak torque	Motor inertia	Gearbox inertia	Exact ratio	Output speed	S1		S5	
							Gearbox nominal torque	Duty factor	Acceleration torque at gearbox	Duty factor at acceleration
	$M_{n\,mot}$	$M_{peak\,mot}$	J_{mot}	J_{red}	I_{exact}	n_2	$M_{n\,red}$	k_{S1}	$M_{acc\,red}$	k_{acc}*
	N.m	N.m	10^{-4} kg.m^2	10^{-4} kg.m^2		rpm	N.m		N.m	
095 U3 B 30	4.10	13.50	2.6 (option 4.5)	9.40	5.2	577	20.3	13.38	66.7	6.90
				6.90	7.25	414	28.2	10.84	93.0	5.27
				4.70	10.25	293	39.1	8.03	129	4.10
				4.10	14.5	207	53.5	5.87	176	2.86
				3.40	19.5	154	70.4	5.22	232	2.52
				3.50	30	100	101	3.59	332	1.72
				2.80	45	67	146	2.64	480	1.25
				2.60	60	50	185	1.97	608	0.92
				1.90	90	33	251	1.32	826	0.61
089 UD B 30	4.85	16.50	1.61	9.40	5.2	577	24.0	11.31	81.5	5.64
				6.90	7.25	414	33.4	9.16	114	4.31
				4.70	10.25	293	46.2	6.79	157	3.36
				4.10	14.5	207	63.3	4.96	215	2.34
				3.40	19.5	154	83.2	4.41	283	2.06
				3.50	30	100	119	3.03	406	1.41
				2.80	45	67	172	2.23	587	1.02
				2.60	60	50	218	1.67	743	0.75
				1.90	90	33	297	1.12	1010	0.50
089 UD C 30	6.90	24.00	2.34	9.40	5.2	577	34.1	7.95	119	3.88
				6.90	7.25	414	47.5	6.44	165	2.96
				4.70	10.25	293	65.8	4.77	229	2.31
				4.10	14.5	207	90.0	3.49	313	1.61
				3.40	19.5	154	118	3.10	412	1.42
				3.50	30	100	170	2.13	590	0.97
				2.80	45	67	245	1.57	853	0.70
				2.60	60	50	311	1.17	1080	0.52
095 U3 D 30	6.90	23.70	4.83 (option 6.7)	9.40	5.2	577	34.1	7.95	117	3.93
				6.90	7.25	414	47.5	6.44	163	3.00
				4.70	10.25	293	65.8	4.77	226	2.34
				4.10	14.5	207	90.0	3.49	309	1.63
				3.40	19.5	154	118	3.10	407	1.44
				3.50	30	100	170	2.13	583	0.98
				2.80	45	67	245	1.57	843	0.71
				2.60	60	50	311	1.17	1067	0.52
115 UD C 30	10.50	43.80	6.39	10.30	5.2	577	51.9	5.22	216	2.13
				7.80	7.25	414	72.3	4.23	302	1.62
				5.60	10.25	293	100	3.14	418	1.26
				5.00	14.5	207	137	2.29	572	0.88
				4.30	19.5	154	180	2.04	752	0.78
				4.40	30	100	258	1.40	1077	0.53
				3.70	45	67	373	1.03	1557	0.38
115 U3 D 30	11.20	41.00	12.5 (option 17.1)	10.30	5.2	577	55.3	4.90	203	2.27
				7.80	7.25	414	77.1	3.97	282	1.74
				5.60	10.25	293	107	2.94	391	1.35
				5.00	14.5	207	146	2.15	535	0.94
				4.30	19.5	154	192	1.91	704	0.83
				4.40	30	100	276	1.31	1009	0.57
115 UD D 30	13.60	56.40	8.38	10.30	5.2	577	67.2	4.03	279	1.65
				7.80	7.25	414	93.7	3.27	388	1.26
				5.60	10.25	293	130	2.42	538	0.98
				5.00	14.5	207	177	1.77	736	0.68
				4.30	19.5	154	233	1.57	968	0.60
				4.40	30	100	335	1.08	1387	0.41

* If kacc < 1, the acceleration torque must be reduced by limiting the current through the drive.

Mjd 1101
Selection

Motor speed 3000 rpm

D+20 lead time (Ex Works)
valid only for Low Backlash MEDIUM

Mjd 1101 $M_{Red\text{-}S1}$ 688 N.m max

Motor type	Motor nominal torque	Motor peak torque	Motor inertia	Gearbox inertia	Exact ratio	Output speed	S1		S5	
							Gearbox nominal torque	Duty factor	Acceleration torque at gearbox	Duty factor at acceleration
	$M_{n\,mot}$	$M_{peak\,mot}$	J_{mot}	J_{red}	I_{exact}	n_2	$M_{n\,red}$	k_{S1}	$M_{acc\,red}$	k_{acc}*
	N.m	N.m	10^{-4} kg.m^2	10^{-4} kg.m^2		rpm	N.m		N.m	
115 UD C 30	10.50	43.80	6.39	20.30	5.2	577	51.9	8.83	216	3.60
				14.80	7.25	414	72.3	6.75	302	2.64
				8.30	10.25	293	100	5.22	418	2.10
				8.10	14.5	207	139	3.75	578	1.44
				6.40	19.5	154	184	3.20	769	1.23
				5.30	30	100	268	2.57	1117	0.98
				5.10	45	67	378	1.76	1577	0.66
				4.80	60	50	485	1.21	2024	0.45
115 U3 D 30	11.20	41.00	12.5 (option 17.1)	20.30	5.2	577	55.3	8.28	203	3.85
				14.80	7.25	414	77.1	6.33	282	2.82
				8.30	10.25	293	107	4.89	391	2.25
				8.10	14.5	207	148	3.51	541	1.53
				6.40	19.5	154	197	3.00	720	1.31
				5.30	30	100	286	2.41	1046	1.05
				5.10	45	67	403	1.65	1476	0.70
				4.80	60	50	517	1.14	1894	0.48
115 UD D 30	13.60	56.40	8.38	20.30	5.2	577	67.2	6.82	279	2.80
				14.80	7.25	414	93.7	5.21	388	2.05
				8.30	10.25	293	130	4.03	538	1.63
				8.10	14.5	207	179	2.89	744	1.12
				6.40	19.5	154	239	2.47	990	0.95
				5.30	30	100	347	1.98	1438	0.76
				5.10	45	67	490	1.36	2030	0.51
142 U3 E 30	18.20	75.00	36.9 (option 49.8)	23.90	5.2	577	89.9	5.09	371	2.10
				18.40	7.25	414	125	3.89	517	1.54
				11.90	10.25	293	173	3.01	715	1.23
				11.70	14.5	207	240	2.16	990	0.84
				10.00	19.5	154	319	1.84	1316	0.72
				8.90	30	100	464	1.48	1913	0.58
				8.70	45	67	655	1.01	2700	0.38
142 UD C 30	18.40	74.90	17.0	23.90	5.2	577	90.9	5.04	370	2.11
				18.40	7.25	414	127	3.85	516	1.54
				11.90	10.25	293	175	2.98	714	1.23
				11.70	14.5	207	243	2.14	988	0.84
				10.00	19.5	154	323	1.82	1314	0.72
				8.90	30	100	469	1.47	1910	0.58
				8.70	45	67	662	1.00	2696	0.38
142 UD E 30	23.00	114.00	27.2	23.90	5.2	577	114	4.03	563	1.38
				18.40	7.25	414	158	3.08	785	1.01
				11.90	10.25	293	219	2.38	1087	0.81
				11.70	14.5	207	303	1.71	1504	0.55
				10.00	19.5	154	404	1.46	2001	0.47
				8.90	30	100	587	1.17	2907	0.38

* If kacc < 1, the acceleration torque must be reduced by limiting the current through the drive.

Mjd Dynabloc Servo gearbox
Tapped holes form BTL - Shrink disk to the right SDR
Dimensions

Mjd 0351 to Mjd 1101 - Universal mounting MU-FF

Dimensions in mm

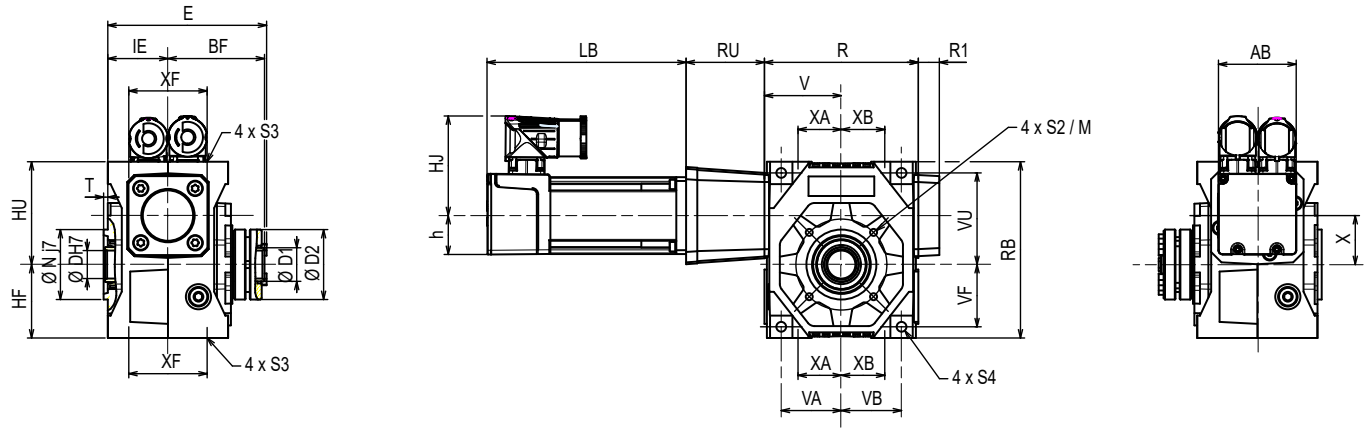

Gearbox type	Gearbox																					
	HF	HU	IE	M	N	R	R1[1]	RB	S2[2]	S3	S4[3]	T	V	VA	VB	VF	VU	X	XA	XB	XF	Weight kg
Mjd 0351	52.5	73.5	43	65	50	110	15	126	M6	M6	7	3	55	43	43	44.5	65.5	35	31	31	58	3.4
Mjd 0451	62	91	50	85	70	125	16	153	M8	M8	9	3	67.5	54	54	53	82	45	40.5	40.5	68	6.2
Mjd 0551	71	104	56	100	80	150	16	175	M8	M8	9	3.5	75	60	60	61	94	55	45	45	78	8.5
Mjd 0631	78	119	63.5	115	95	168	17	197	M10	M10	11	3.5	84	67	67	66	107	63	49	49	91	13.9
Mjd 0751	94	138	74	130	110	208	20	232	M10	M10	11	4	104	86	86	82	126	75	68	68	110	20.5
Mjd 0901	106	158	85	165	130	229	22	264	M12	M12	13	4	114.5	93	93	91	143	90	70.5	70.5	115	32.5
Mjd 1101	123	183	91	200	165	264	20	306	M12	M12	13	5	132	110	110	108	168	110	87.5	87.5	140	46.5

1. Maximum length (EXPERT version only)
2. Mjd 1101 with 8 tapped holes
3. Through holes

Type	Shaft and shrink disk				
	BF	D	D1	D2	E
Mjd 0351	69	20	24	50	114
Mjd 0451	78	25	30	60	130
Mjd 0551	87	30	36	72	145
Mjd 0631	96.5	35	44	80	162
Mjd 0751	110	40	50	90	186
Mjd 0901	124	50	68	115	211
Mjd 1101	133	60	80	145	226

Motor type		Unimotor							Gearbox type						
		Without brake		With brake					Mjd						
		LB	Weight kg	LB	Weight kg	AB	HJ	h	0351	0451	0551	0631	0751	0901	1101
									RU						
Unimotor hd	**055 UD A**	118	1.2	158	1.6	55	72	27.5	56	68	-	-	-	-	-
	055 UD B	142	1.5	182	1.9	55	72	27.5	56	68	-	-	-	-	-
	055 UD C	166	1.8	206	2.2	55	72	27.5	56	68	-	-	-	-	-
	067 UD B	173	2.6	208	3.3	70	77	35	-	68	71	76	-	-	-
	067UD C	203	3.2	238	3.9	70	77	35	-	68	71	76	-	-	-
	089 UD B	191	4.4	231	5.4	91	85	45.5	-	78	81	82	87	91	-
	089 UD C	221	5.5	261	6.5	91	85	45.5	-	78	81	82	87	91	-
	115 UD C	237	8.9	274	10.4	116	99	58	-	-	-	-	97	101	107
	115 UD D	267	10.7	304	12.2	116	99	58	-	-	-	-	97	101	107
	142 UD C	217	11.5	283	14.3	142	113	71	-	-	-	-	-	-	107
	142 UD E	277	18.5	343	21.3	142	113	71	-	-	-	-	-	-	107
Unimotor fm	**075 U3 B**	239	3.7	269	4.2	75	89	37.5	-	68	71	76	-	-	-
	095 U3 B	257	5.8	287	6.4	90	94	45	-	78	81	82	87	91	-
	095 U3 D	317	8.2	347	8.8	90	94	45	-	78	81	82	87	91	-
	115 U3 D	337	12.6	367	13.8	115	99	57.5	-	-	-	-	97	101	107
	142 U3 E	313	20.7	373	22.5	142	113	71	-	-	-	-	-	-	107

Max. length depending on the feedback

Mjd Dynabloc Servo gearbox
Tapped holes form BTL - Hollow shaft H
Dimensions

Mjd 0351 to Mjd 1101 - Universal mounting MU-FF

Dimensions in mm

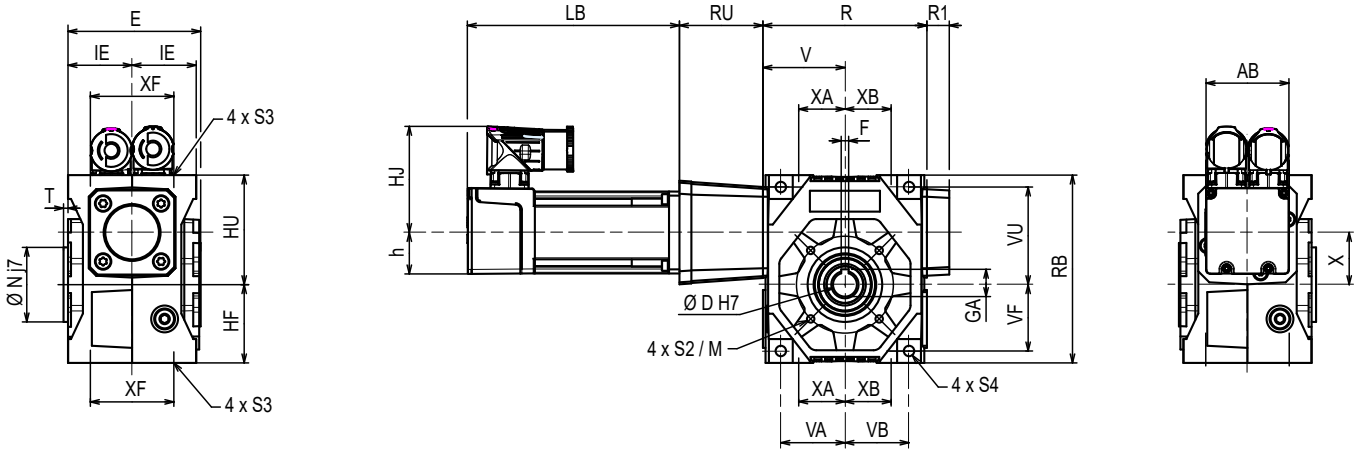

Gearbox type	Gearbox																					Weight kg
	HF	HU	IE	M	N	R	R1[1]	RB	S2[2]	S3	S4[3]	T	V	VA	VB	VF	VU	X	XA	XB	XF	
Mjd 0351	52.5	73.5	43	65	50	110	15	126	M6	M6	7	3	55	43	43	44.5	65.5	35	31	31	58	3.4
Mjd 0451	62	91	50	85	70	125	16	153	M8	M8	9	3	67.5	54	54	53	82	45	40.5	40.5	68	6.2
Mjd 0551	71	104	56	100	80	150	16	175	M8	M8	9	3.5	75	60	60	61	94	55	45	45	78	8.5
Mjd 0631	78	119	63.5	115	95	168	17	197	M10	M10	11	3.5	84	67	67	66	107	63	49	49	91	13.9
Mjd 0751	94	138	74	130	110	208	20	232	M10	M10	11	4	104	86	86	82	126	75	68	68	110	20.5
Mjd 0901	106	158	85	165	130	229	22	264	M12	M12	13	4	114.5	93	93	91	143	90	70.5	70.5	130	32.5
Mjd 1101	123	183	91	200	165	264	20	306	M12	M12	13	5	132	110	110	108	168	110	87.5	87.5	140	46.5

1. Maximum length (EXPERT version only)
2. Mjd 1101 with 8 tapped holes
3. Through holes

Type	Hollow shaft			
	D	GA	F	E
Mjd 0351	16	18.3	5	90
Mjd 0451	25	28.3	8	104
Mjd 0551	30	33.3	8	116
Mjd 0631	35	38.3	10	131
Mjd 0751	40	43.3	12	152
Mjd 0901	50	53.8	14	174
Mjd 1101	60	64.4	18	186

Motor type		Unimotor							Gearbox type						
		Without brake		With brake		AB	HJ	h	Mjd						
		LB	Weight kg	LB	Weight kg				0351	0451	0551	0631	0751	0901	1101
									RU						
Unimotor hd	**055 UD A**	118	1.2	158	1.6	55	72	27.5	56	68	-	-	-	-	-
	055 UD B	142	1.5	182	1.9	55	72	27.5	56	68	-	-	-	-	-
	055 UD C	166	1.8	206	2.2	55	72	27.5	56	68	-	-	-	-	-
	067 UD B	173	2.6	208	3.3	70	77	35	-	68	71	76	-	-	-
	067 UD C	203	3.2	238	3.9	70	77	35	-	68	71	76	-	-	-
	089 UD B	191	4.4	231	5.4	91	85	45.5	-	78	81	82	87	91	-
	089 UD C	221	5.5	261	6.5	91	85	45.5	-	78	81	82	87	91	-
	115 UD C	237	8.9	274	10.4	116	99	58	-	-	-	-	97	101	107
	115 UD D	267	10.7	304	12.2	116	99	58	-	-	-	-	97	101	107
	142 UD C	217	11.5	283	14.3	142	113	71	-	-	-	-	-	-	107
	142 UD E	277	18.5	343	21.3	142	113	71	-	-	-	-	-	-	107
Unimotor fm	**075 U3 B**	239	3.7	269	4.2	75	89	37.5	-	68	71	76	-	-	-
	095 U3 B	257	5.8	287	6.4	90	94	45	-	78	81	82	87	91	-
	095 U3 D	317	8.2	347	8.8	90	94	45	-	78	81	82	87	91	-
	115 U3 D	337	12.6	367	13.8	115	99	57.5	-	-	-	-	97	101	107
	142 U3 E	313	20.7	373	22.5	142	113	71	-	-	-	-	-	-	107

Max. length depending on the feedback

Mjd Dynabloc Servo gearbox
Tapped holes form BTL - Solid shaft to the left L
Dimensions

Mjd 0351 to Mjd 1101 - Universal mounting MU-FF

Dimensions in mm

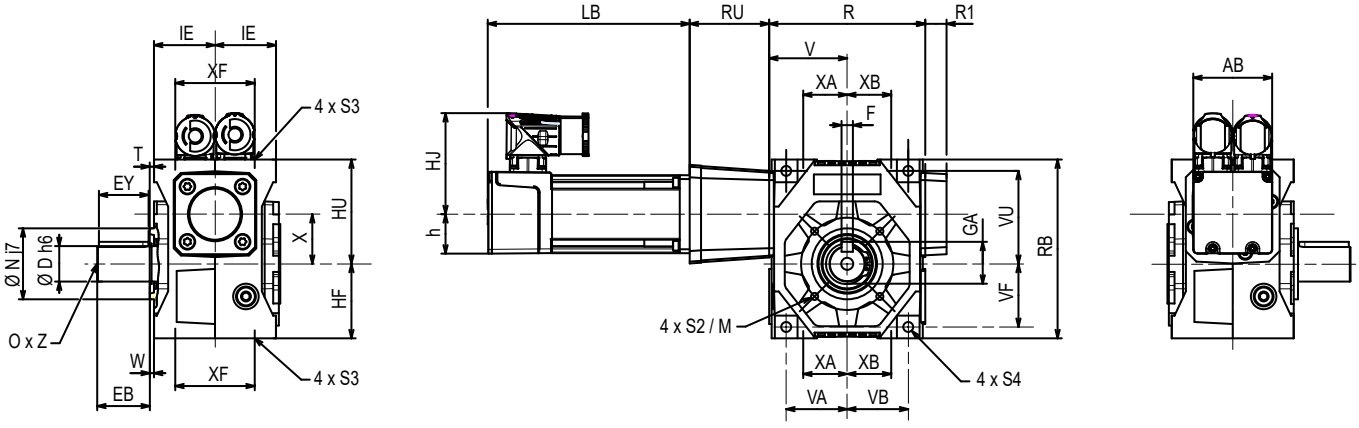

Gearbox type	Gearbox																					Weight kg	
	HF	HU	IE	M	N	R	R1[1]	RB	S2[2]	S3	S4[3]	T	V	VA	VB	VF	VU	X	XA	XB	XF	Shaft L or R	Shaft LR
Mjd 0351	52.5	73.5	43	65	50	110	15	126	M6	M6	7	3	55	43	43	44.5	65.5	35	31	31	58	3.6	3.7
Mjd 0451	62	91	50	85	70	125	16	153	M8	M8	9	3	67.5	54	54	53	82	45	40.5	40.5	68	6.8	7.0
Mjd 0551	71	104	56	100	80	150	16	175	M8	M8	9	3.5	75	60	60	61	94	55	45	45	78	9.2	9.5
Mjd 0631	78	119	63.5	115	95	168	17	197	M10	M10	11	3.5	84	67	67	66	107	63	49	49	91	15.2	15.8
Mjd 0751	94	138	74	130	110	208	20	232	M10	M10	11	4	104	86	86	82	126	75	68	68	110	22.2	23.0
Mjd 0901	106	158	85	165	130	229	22	264	M12	M12	13	4	114.5	93	93	91	143	90	70.5	70.5	130	35.1	36.1
Mjd 1101	123	183	91	200	165	264	20	306	M12	M12	13	5	132	110	110	108	168	110	87.5	87.5	140	50.3	52.3

1. Maximum length (EXPERT version only)
2. Mjd 1101 with 8 tapped holes
3. Through holes

Type	Solid output shaft							
	D	EB	EY	W	GA	F	O	Z
Mjd 0351	25	38	35	2	28	8	M10	22
Mjd 0451	35	55	50	2	38	10	M12	28
Mjd 0551	40	60	55	2	43	12	M16	36
Mjd 0631	45	70	65	2	48.5	14	M16	36
Mjd 0751	50	75	70	2	53.5	14	M16	36
Mjd 0901	65	100	95.5	2	69	18	M20	42
Mjd 1101	75	115	110	2	79.5	20	M20	42

Motor type		Unimotor							Gearbox type						
		Without brake		With brake					Mjd						
		LB	Weight kg	LB	Weight kg	AB	HJ	h	0351	0451	0551	0631	0751	0901	1101
									RU						
Unimotor hd	**055 UD A**	118	1.2	158	1.6	55	72	27.5	56	68	-	-	-	-	-
	055 UD B	142	1.5	182	1.9	55	72	27.5	56	68	-	-	-	-	-
	055 UD C	166	1.8	206	2.2	55	72	27.5	56	68	-	-	-	-	-
	067 UD B	173	2.6	208	3.3	70	77	35	-	68	71	76	-	-	-
	067 UD C	203	3.2	238	3.9	70	77	35	-	68	71	76	-	-	-
	089 UD B	191	4.4	231	5.4	91	85	45.5	-	78	81	82	87	91	-
	089 UD C	221	5.5	261	6.5	91	85	45.5	-	78	81	82	87	91	-
	115 UD C	237	8.9	274	10.4	116	99	58	-	-	-	-	97	101	107
	115 UD D	267	10.7	304	12.2	116	99	58	-	-	-	-	97	101	107
	142 UD C	217	11.5	283	14.3	142	113	71	-	-	-	-	-	-	107
	142 UD E	277	18.5	343	21.3	142	113	71	-	-	-	-	-	-	107
Unimotor fm	**075 U3 B**	239	3.7	269	4.2	75	89	37.5	-	68	71	76	-	-	-
	095 U3 B	257	5.8	287	6.4	90	94	45	-	78	81	82	87	91	-
	095 U3 D	317	8.2	347	8.8	90	94	45	-	78	81	82	87	91	-
	115 U3 D	337	12.6	367	13.8	115	99	57.5	-	-	-	-	97	101	107
	142 U3 E	313	20.7	373	22.5	142	113	71	-	-	-	-	-	-	107

Max. length depending on the feedback

Cb Dynabloc Servo gearbox
In-line output shaft
General

Cb Dynabloc

• A high efficiency solution for standard backlash applications

- **High efficiency**
- **Compact size**
- **Rugged design**
- **Integrated mounting**
- **Unimotor fm**

Cb Dynabloc servo gearboxes are designed to reduce the speed and increase the torque of servo motors and to optimize the ratio of inertia between the driven load and the motor.

Cb Dynabloc gearboxes provide a high-efficiency solution for applications requiring standard backlash. The helical gearboxes are compact and robust thanks to their rugged design and integrated servo motor mounting.

Cb Dynabloc gearboxes are fitted with Unimotor fm motors, making them ideal for continuous duty applications with high inertia loads. Standard motor speed for D+20 lead time is 3000 rpm.

Description	
Range	5 sizes from 3031 to 3433
Gearbox ratio	Ratios from 3 to 104
Nominal torque	Up to 1590 N.m
Backlash	STANDARD: 10 to 30 min, depending on sizes and ratio
Lubrication	Supplied with ISO VG220 mineral oil, depending on operating position
Efficiency	~ 95 %
Output shaft	Solid shaft + key Tolerance of diameters in accordance with NFE22-051 and ISO R 775 Key ISO R 773
Unimotor fm	Nominal speed 3000 rpm Connectors rotatable by 90° Incremental or absolute encoder Motor with or without brake Integrated mounting
Finish	Painted (RAL 9005 black) (Except Cb30: unpainted aluminium)

Cb Dynabloc Servo gearbox
Technical characteristics

Gearbox type	Exact ratio	Efficiency	Angular backlash arcmin STANDARD	Max. radial load F_r at E/2 N	Max. axial load F_a N
Cb 3031	3.24	0.95	22	884	442
	5.17		20	1115	558
Cb 3032	7.38	0.95	15	3011	1506
	10.20		15	3111	1556
	12.20		15	2990	1495
	15.40		14	2738	1369
	20.20		14	4029	2015
	25.60		14	4602	2301
	32.50		13	4982	2746
	40.30		13	5409	
Cb 3131	3.25	0.95	17	1146	573
	4.92		15	1251	626
	7.17		15	1365	683
Cb 3133	4.99	0.95	21	3474	1737
	7.19		16	3750	1875
	9.67		16	4012	2006
	12.40		16	4556	2278
	16.00		15	5001	2501
	20.20		15	5449	2725
	24.40		15	6055	3028
	30.60		15	6598	3299
	38.80		15	7206	3603
	49.10		15	7293	3647
	65.30		17	7293	3647
Cb 3231	3.09	0.95	13	1553	777
	4.88		12	1787	894
	6.92		11	1976	988
Cb 3233	4.88	0.95	16	4821	2411
	6.96		15	5178	2589
	9.62		12	5690	2845
	12.00		12	5890	2945
	15.80		12	6068	3034
	19.20		12	6835	3418
	24.20		11	7713	3857
	25.40		11	7850	3925
	30.30		11	7977	3989
	39.10		11	8360	4180
	39.20		11	8769	4385
	50.20		11	10694	5347
	64.20		13	10840	5420
	77.90		13	11765	5883
	98.20		13	12583	6292
Cb 3331	3.16	0.95	11	2943	1472
	4.87		10	3382	1691
	7.08		10	3807	1904
Cb 3333	5.06	0.95	15	9252	4626
	7.09		15	9956	4978
	9.95		14	12165	6083
	9.98		11	10884	5442
	12.50		14	13597	6799
	12.70		11	11318	5659
	16.10		11	12339	6170
	19.60		11	13781	6891
	24.60		10	15371	7686
	24.70		10	15640	7820
	30.20		10	16041	8021
	39.40		10	17909	8955
	48.70		10	23656	9891
	66.10		11	21926	10963
	80.90		11	23656	11828
	101.00		11	26032	13016
Cb 3431	3.18	0.95	9	4525	2263
	5.13		8	5339	2670
	6.83		8	5859	2930
Cb 3433	6.86	0.95	11	10690	5345
	9.67		9	10404	5202
	12.20		8	11346	5673
	13.00		8	12140	6070
	15.80		8	12600	6300
	16.20		8	13555	6777
	19.80		8	14540	7270
	25.50		8	16012	8006
	31.90		8	17460	8730
	38.20		8	19672	9836
	49.60		9	21220	10610
	50.30		8	22332	11166
	63.90		9	24915	12458
	80.10		9	26018	13009
	104.00		9	28556	14278

STD BACKLASH

Cb Dynabloc Servo gearbox
Mounting form - Operating positions

Mounting form

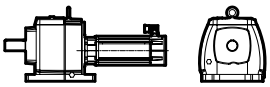

S
Foot

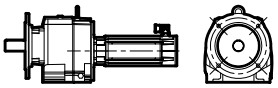

BS-BD
Flange

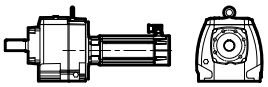

BT
Tapped holes

Operating positions

Foot form

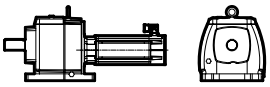

B3

B6

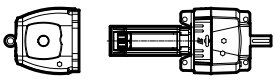

B7

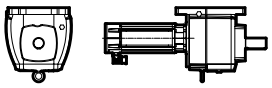

B8

V5

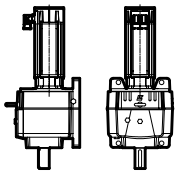

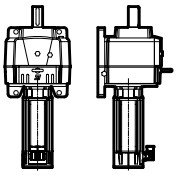

V6

Flange form

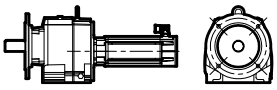

B5

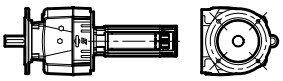

B52

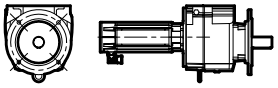

B53

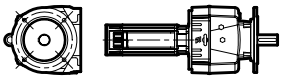

B54

V1

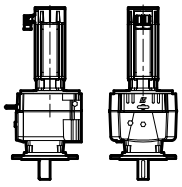

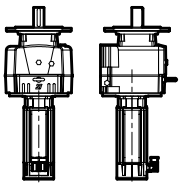

V3

Connector positions

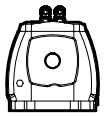

A : STANDARD

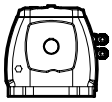

B

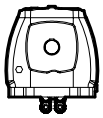

C

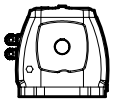

D

Cb Dynabloc Servo gearbox
Ordering code information

Gearbox

Cb	3333	B5	BS	S	39.4	MI
Gearbox type	Size **3031, 3032, 3131, 3133, 3231, 3233, 3331, 3333, 3431, 3433**	Operating position **Feet: B3, B6, B7, B8, V5, V6** **Flange: B5, B52, B53, B54, V1, V3**	Mounting form **S, BS, BD, BT**	Output shaft **Plain shaft S**	Exact ratio **3.09 to 104**	Motor input type **MI**

Motor: Unimotor fm

095	U3	B	30	0	B	R	CA	A
Unimotor fm **075, 095, 115, 142, 190**	Unimotor fm voltage* **U3** = 400 V	Stator length **A, B, C, D, E**	Nominal speed* **30** = 3000 rpm	Brake 24 V **0** = Without brake **5** = Parking brake	Connection type* **B** = Power and Signal 90° rotatable (**J** = for Motor 190 U3)	Output shaft **R** = Integrated mountin	Feedback device See Servo Drives and Motors technical catalogue	Inertia **A/C** = Standard **B/D** = High

**For the full range of motor options, please refer to the Servo Drives and Motors Technical Catalogue*

We reserve the right to modify the design, technical specifications and dimensions of the products shown in this document.
The description cannot in any way be considered contractual.

Cb 3031 - Cb 3032 - Cb 3131
Selection

Motor speed 3000 rpm

D+20 lead time (Ex Works)

Cb 3031 M_{Red-S1} 16 N.m max

Motor type	Motor nominal torque	Motor peak torque	Motor inertia	Gearbox inertia	Exact ratio	Output speed	S1		S5	
							Gearbox nominal torque	Duty factor	Acceleration torque at gearbox	Duty factor at acceleration
	$M_{n\,mot}$	$M_{peak\,mot}$	J_{mot}	J_{red}	I_{exact}	n_2	$M_{n\,red}$	k_{S1}	$M_{acc\,red}$	k_{acc}*
	N.m	N.m	10^{-4} kg.m^2	10^{-4} kg.m^2		rpm	N.m		N.m	
075 U3 B 30	2.3	7	1.22	0.07	3.24	926	7.2	2.21	22.0	1.82
				0.04	5.17	580	11.5	1.39	35.1	1.14
095 U3 B 30	4.1	13.5	2.6	0.07	3.24	926	12.9	1.24	42.4	0.94

Cb 3032 M_{Red-S1} 90 N.m max

Motor type	Motor nominal torque	Motor peak torque	Motor inertia	Gearbox inertia	Exact ratio	Output speed	S1		S5	
							Gearbox nominal torque	Duty factor	Acceleration torque at gearbox	Duty factor at acceleration
	$M_{n\,mot}$	$M_{peak\,mot}$	J_{mot}	J_{red}	I_{exact}	n_2	$M_{n\,red}$	k_{S1}	$M_{acc\,red}$	k_{acc}*
	N.m	N.m	10^{-4} kg.m^2	10^{-4} kg.m^2		rpm	N.m		N.m	
075 U3 B 30	2.3	7	1.22	0.19	10.20	294	22.1	3.87	67.2	3.18
				0.15	12.20	246	26.4	3.25	80.4	2.67
				0.11	15.40	195	33.3	2.60	101.4	2.14
				0.07	20.20	149	43.7	2.00	133.0	1.64
				0.05	25.60	117	55.4	1.59	168.6	1.30
				0.03	32.50	92	70.3	1.26	214.1	1.03
				0.02	40.30	74	87.2	1.02	265.4	0.84
095 U3 B 30	4.1	13.5	2.6	0.29	7.38	407	28.5	2.95	93.7	2.24
				0.19	10.20	294	39.3	2.17	129.6	1.65
				0.15	12.20	246	47.1	1.83	155.0	1.39
				0.11	15.40	195	59.4	1.46	195.6	1.11
				0.07	20.20	149	77.9	1.12	256.6	0.85

Cb 3131 M_{Red-S1} 50 N.m max

Motor type	Motor nominal torque	Motor peak torque	Motor inertia	Gearbox inertia	Exact ratio	Output speed	S1		S5	
							Gearbox nominal torque	Duty factor	Acceleration torque at gearbox	Duty factor at acceleration
	$M_{n\,mot}$	$M_{peak\,mot}$	J_{mot}	J_{red}	I_{exact}	n_2	$M_{n\,red}$	k_{S1}	$M_{acc\,red}$	k_{acc}*
	N.m	N.m	10^{-4} kg.m^2	10^{-4} kg.m^2		rpm	N.m		N.m	
075 U3 B 30	2	7	1.22	0.14	4.92	610	11.0	4.56	33.4	3.74
				0.08	7.17	418	16.0	3.13	48.7	2.57
095 U3 B 30	4	14	2.6	0.26	3.25	923	12.9	3.87	42.6	2.94
				0.14	4.92	610	19.6	2.56	64.4	1.94
115 U3 B 30	7	22	7.7	0.26	3.25	923	21.1	2.37	70.0	1.79
				0.14	4.92	610	32.0	1.56	105.9	1.18
115 U3 D 30	11.2	41	12.5	0.26	3.25	923	35.3	1.42	129.3	0.97

* If kacc < 1, the acceleration torque must be reduced by limiting the current through the drive.

Cb 3133 - Cb 3231
Selection

Motor speed 3000 rpm

D+20 lead time (Ex Works)

Cb 3133 M_{Red-S1} 200 N.m max

Motor type	Motor nominal torque	Motor peak torque	Motor inertia	Gearbox inertia	Exact ratio	Output speed	S1		S5	
							Gearbox nominal torque	Duty factor	Acceleration torque at gearbox	Duty factor at acceleration
	$M_{n\,mot}$	$M_{peak\,mot}$	J_{mot}	J_{red}	I_{exact}	n_2	$M_{n\,red}$	k_{S1}	$M_{acc\,red}$	k_{acc}*
	N.m	N.m	10^{-4} kg.m^2	10^{-4} kg.m^2		rpm	N.m		N.m	
075 U3 B 30	2.3	7	1.22	0.29	15.80	190	33.2	4.26	100.9	3.50
				0.29	20.20	149	42.4	4.40	129.1	3.61
				0.22	24.40	123	51.2	3.86	155.9	3.17
				0.15	30.60	98	64.2	3.10	195.5	2.54
				0.11	38.80	77	81.4	2.46	247.9	2.02
				0.07	49.10	61	103.1	1.95	313.7	1.60
				0.36	65.30	46	137.1	1.00	417.2	0.82
095 U3 B 30	4.1	13.5	2.6	1.2	7.19	417	26.9	4.90	88.6	3.72
				0.33	10.40	288	38.9	3.63	128.1	2.76
				0.56	12.40	242	46.4	3.43	152.8	2.61
				0.4	16.00	188	59.9	2.89	197.1	2.20
				0.29	20.20	149	75.6	2.47	248.9	1.87
				0.22	24.40	123	91.3	2.16	300.6	1.64
				0.15	30.60	98	114.5	1.74	377.0	1.32
				0.11	38.80	77	145.2	1.38	478.1	1.05
115 U3 B 30	6.7	22.2	7.7	0.99	4.99	601	30.5	3.39	101.1	2.56
				1.2	7.19	417	44.0	3.00	145.7	2.26
				0.8	9.67	310	59.1	2.48	195.9	1.87
				0.56	12.40	242	75.8	2.10	251.2	1.58
				0.4	16.00	188	97.8	1.77	324.2	1.34
				0.29	20.20	149	123.5	1.51	409.3	1.14
				0.22	24.40	123	149.2	1.32	494.4	1.00
				0.15	30.60	98	187.1	1.06	620.0	0.80
115 U3 D 30	11.2	41	12.5	0.99	4.99	601	51.0	2.03	186.7	1.39
				1.2	7.19	417	73.5	1.79	269.0	1.22
				0.8	9.67	310	98.8	1.48	361.8	1.01
				0.56	12.40	242	126.8	1.26	464.0	0.86
				0.4	16.00	188	163.6	1.06	598.7	0.72

Cb 3231 M_{Red-S1} 80 N.m max

Motor type	Motor nominal torque	Motor peak torque	Motor inertia	Gearbox inertia	Exact ratio	Output speed	S1		S5	
							Gearbox nominal torque	Duty factor	Acceleration torque at gearbox	Duty factor at acceleration
	$M_{n\,mot}$	$M_{peak\,mot}$	J_{mot}	J_{red}	I_{exact}	n_2	$M_{n\,red}$	k_{S1}	$M_{acc\,red}$	k_{acc}*
	N.m	N.m	10^{-4} kg.m^2	10^{-4} kg.m^2		rpm	N.m		N.m	
095 U3 B 30	4.1	13.5	2.6	0.56	4.88	615	19.4	4.12	63.9	3.13
				0.33	6.92	434	27.5	2.91	90.6	2.21
115 U3 B 30	6.7	22.2	7.7	1.05	3.09	971	20.1	3.98	66.5	3.01
				0.56	4.88	615	31.7	2.52	105.1	1.90
				0.33	6.92	434	45.0	1.78	149.0	1.34
115 U3 D 30	11.2	41	12.5	1.05	3.09	971	33.6	2.38	122.9	1.63
				0.56	4.88	615	53.0	1.51	194.1	1.03

* If kacc < 1, the acceleration torque must be reduced by limiting the current through the drive.

STD BACKLASH

Cb 3233
Selection

Motor speed 3000 rpm

D+20 lead time (Ex Works)

Cb 3233 $M_{Red\text{-}S1}$ **455 N.m max**

Motor type	Motor nominal torque	Motor peak torque	Motor inertia	Gearbox inertia	Exact ratio	Output speed	S1		S5	
							Gearbox nominal torque	Duty factor	Acceleration torque at gearbox	Duty factor at acceleration
	$M_{n\,mot}$	$M_{peak\,mot}$	J_{mot}	J_{red}	I_{exact}	n_2	$M_{n\,red}$	k_{S1}	$M_{acc\,red}$	k_{acc}*
	N.m	N.m	10^{-4} kg.m^2	10^{-4} kg.m^2		rpm	N.m		N.m	
075 U3 B 30	2.3	7	1.22	0.28	25.40	118	53.3	4.68	162.3	3.84
				0.28	50.20	60	105.4	4.27	320.7	3.51
				1.39	64.20	47	134.8	3.36	410.2	2.76
				1.08	77.90	39	163.5	2.78	497.7	2.28
				0.79	98.20	31	206.1	2.21	627.4	1.82
095 U3 B 30	4.1	13.5	2.6	0.86	15.40	195	57.6	4.33	189.7	3.29
				0.86	19.90	151	74.5	3.35	245.2	2.54
				0.86	24.20	124	90.6	4.38	298.2	3.33
				0.62	30.30	99	113.4	3.76	373.3	2.85
				0.41	39.20	77	146.7	3.05	483.0	2.31
				0.28	50.20	60	187.8	2.40	618.5	1.82
				1.39	64.20	47	240.2	1.88	791.0	1.43
				1.08	77.90	39	291.5	1.56	959.8	1.18
				0.79	98.20	31	367.5	1.24	1209.9	0.94
115 U3 B 30	6.7	22.2	7.7	1.39	9.72	309	59.4	4.20	196.9	3.17
				2.21	12.00	250	73.4	4.30	243.1	3.24
				1.54	15.80	190	96.6	3.58	320.1	2.70
				1.18	19.20	156	117.4	3.13	389.0	2.37
				0.86	24.20	124	148.0	2.68	490.3	2.02
				0.62	30.30	99	185.3	2.30	613.9	1.73
				0.41	39.20	77	239.7	1.87	794.2	1.41
				1.95	48.90	61	299.0	1.50	990.8	1.13
				1.39	64.20	47	392.6	1.15	1300.8	0.87
115 U3 D 30	11.2	41	12.5	3.77	4.88	615	49.9	4.66	182.6	3.18
				2.26	6.96	431	71.1	3.51	260.4	2.39
				1.39	9.62	312	98.3	2.97	360.0	2.03
				2.21	12.00	250	122.7	2.57	449.0	1.76
				1.54	15.80	190	161.5	2.14	591.2	1.46
				1.18	19.20	156	196.3	1.88	718.5	1.28
				0.86	24.20	124	247.4	1.60	905.6	1.10
				0.62	30.30	99	309.7	1.38	1133.8	0.94
				0.62	39.10	77	399.7	1.12	1463.1	0.76

STD BACKLASH

* If kacc < 1, the acceleration torque must be reduced by limiting the current through the drive.

Cb 3331
Selection

Motor speed 3000 rpm

D+20 lead time (Ex Works)

Cb 3331 M_{Red-S1} 150 N.m max

Motor type	Motor nominal torque	Motor peak torque	Motor inertia	Gearbox inertia	Exact ratio	Output speed	S1		S5	
							Gearbox nominal torque	Duty factor	Acceleration torque at gearbox	Duty factor at acceleration
	$M_{n\,mot}$	$M_{peak\,mot}$	J_{mot}	J_{red}	I_{exact}	n_2	$M_{n\,red}$	k_{S1}	$M_{acc\,red}$	k_{acc}*
	N.m	N.m	10^{-4} kg.m^2	10^{-4} kg.m^2		rpm	N.m		N.m	
115 U3 B 30	7	22	7.7	0.96	4.87	616	31.7	4.50	104.9	3.40
				0.96	7.08	424	46.0	3.26	152.5	2.46
115 U3 D 30	11	41	12.5	1.76	3.16	949	34.3	3.20	125.7	2.19
				0.96	4.87	616	52.9	2.69	193.7	1.84
142 U3 E 30	18	75	36.9	1.76	3.16	949	55.8	1.97	229.9	1.20
				0.96	4.87	616	86.0	1.66	354.3	1.01

STD BACKLASH

* If kacc < 1, the acceleration torque must be reduced by limiting the current through the drive.

Cb 3333
Selection

Motor speed 3000 rpm

D+20 lead time (Ex Works)

Cb 3333 M_{Red-S1} 835 N.m max

Motor type	Motor nominal torque	Motor peak torque	Motor inertia	Gearbox inertia	Exact ratio	Output speed	S1		S5	
							Gearbox nominal torque	Duty factor	Acceleration torque at gearbox	Duty factor at acceleration
	$M_{n\,mot}$	$M_{peak\,mot}$	J_{mot}	J_{red}	I_{exact}	n_2	$M_{n\,red}$	k_{S1}	$M_{acc\,red}$	k_{acc}*
	N.m	N.m	10^{-4} kg.m^2	10^{-4} kg.m^2		rpm	N.m		N.m	
075 U3 B 30	2.3	7	1.22	1.83	80.90	37	169.8	4.90	516.8	4.03
				1.35	101.00	30	212.0	3.94	645.3	3.23
095 U3 B 30	4.1	13.5	2.6	0.52	24.70	121	92.4	4.42	304.3	3.36
				0.52	48.70	62	182.2	4.42	600.0	3.36
				2.36	66.10	45	247.3	3.35	814.4	2.54
				1.83	80.90	37	302.7	2.75	996.8	2.09
				1.35	101.00	30	377.9	2.21	1244.4	1.68
115 U3 B 30	6.7	22.2	7.7	1.1	15.30	196	93.6	4.37	310.0	3.29
				1.1	20.00	150	122.3	3.34	405.2	2.52
				1.1	24.70	121	151.0	2.70	500.5	2.04
				1.1	30.20	99	184.7	4.36	611.9	3.29
				0.73	39.40	76	240.9	3.35	798.3	2.52
				0.52	48.70	62	297.8	2.71	986.7	2.04
				2.36	66.10	45	404.2	2.05	1339.3	1.55
				1.83	80.90	37	494.7	1.68	1639.1	1.27
				1.35	101.00	30	617.6	1.35	2046.4	1.02
115 U3 D 30	11.2	41	12.5	2.55	9.95	302	101.7	4.02	372.3	2.74
				1.82	12.50	240	127.8	3.20	467.7	2.18
				2.73	16.10	186	164.6	4.24	602.5	2.90
				2.08	19.60	153	200.3	3.65	733.4	2.49
				1.51	24.60	122	251.5	3.16	920.5	2.16
				1.1	30.20	99	308.7	2.61	1130.1	1.78
				0.73	39.40	76	402.7	2.00	1474.3	1.37
				3.18	52.10	58	532.6	1.55	1949.6	1.06
				2.36	66.10	45	675.7	1.23	2473.4	0.84
				1.83	80.90	37	827.0	1.01	3027.2	0.69
142 U3 E 30	18.2	75	36.9	6.99	5.06	593	84.0	4.86	346.4	2.95
				4.21	7.09	423	117.8	3.47	485.3	2.10
				2.55	9.98	301	165.8	3.74	683.1	2.27
				1.82	12.70	236	211.0	3.18	869.3	1.93
				2.73	16.10	186	267.4	2.61	1102.1	1.58
				2.08	19.60	153	325.6	2.25	1341.6	1.36
				1.51	24.60	122	408.6	1.94	1683.9	1.18
				1.1	30.20	99	501.6	1.61	2067.2	0.97
				4.19	41.10	73	682.7	1.20	2813.3	0.73

* If kacc < 1, the acceleration torque must be reduced by limiting the current through the drive.

Cb 3431 - Cb 3433
Selection

Motor speed 3000 rpm

D+20 lead time (Ex Works)

Cb 3431 M_{Red-S1} 330 N.m max

Motor type	Motor nominal torque	Motor peak torque	Motor inertia	Gearbox inertia	Exact ratio	Output speed	S1		S5	
							Gearbox nominal torque	Duty factor	Acceleration torque at gearbox	Duty factor at acceleration
	$M_{n\,mot}$	$M_{peak\,mot}$	J_{mot}	J_{red}	I_{exact}	n_2	$M_{n\,red}$	k_{S1}	$M_{acc\,red}$	k_{acc}*
	N.m	N.m	10^{-4} kg.m²	10^{-4} kg.m²		rpm	N.m		N.m	
115 U3 D 30	11	41	12.5	2.44	6.83	439	74.2	4.25	271.6	2.90
142 U3 E 30	18	75	36.9	2.44	5.13	585	90.6	3.62	373.2	2.20
190 U3 D 30	33	134	86.8	4.79	3.18	943	102.4	3.11	411.8	1.94
				2.44	5.13	585	165.2	1.99	664.3	1.23

Cb 3433 M_{Red-S1} 1590 N.m max

Motor type	Motor nominal torque	Motor peak torque	Motor inertia	Gearbox inertia	Exact ratio	Output speed	S1		S5	
							Gearbox nominal torque	Duty factor	Acceleration torque at gearbox	Duty factor at acceleration
	$M_{n\,mot}$	$M_{peak\,mot}$	J_{mot}	J_{red}	I_{exact}	n_2	$M_{n\,red}$	k_{S1}	$M_{acc\,red}$	k_{acc}*
	N.m	N.m	10^{-4} kg.m²	10^{-4} kg.m²		rpm	N.m		N.m	
115 U3 B 30	6.7	22.2	7.7	6.88	63.90	47	390.7	4.03	1294.7	3.04
				5.07	80.10	37	489.8	3.23	1622.9	2.44
				3.53	104.00	29	636.0	2.50	2107.2	1.89
115 U3 D 30	11.2	41	12.5	2.84	25.60	117	261.7	3.56	957.9	2.43
				2.84	31.90	94	326.1	4.72	1193.7	3.22
				2.12	38.20	79	390.5	3.97	1429.4	2.71
				1.34	50.30	60	514.2	3.04	1882.2	2.08
				6.88	63.90	47	653.2	2.41	2391.1	1.65
				5.07	80.10	37	818.8	1.93	2997.3	1.32
				3.53	104.00	29	1063.1	1.50	3891.6	1.02
142 U3 E 30	18.2	75	36.9	5.83	13.00	231	215.9	4.75	889.9	2.88
				5.83	16.20	185	269.1	3.81	1108.9	2.31
				5.83	19.80	152	328.9	4.51	1355.3	2.74
				3.99	25.50	118	423.6	3.60	1745.5	2.18
				2.84	31.90	94	529.9	2.90	2183.6	1.76
				2.12	38.20	79	634.5	2.44	2614.8	1.48
				9.65	49.60	60	823.9	1.90	3395.1	1.15
				6.88	63.90	47	1061.4	1.48	4374.0	0.90
				5.07	80.10	37	1330.5	1.19	5482.9	0.72
190 U3 D 30	33	134	86.8	13.61	6.86	437	207.9	4.27	835.8	2.66
				16.33	9.67	310	293.0	4.01	1178.2	2.49
				11.64	12.20	246	369.7	3.44	1486.5	2.14
				8.08	15.80	190	478.8	2.89	1925.1	1.79
				5.83	19.80	152	600.0	2.47	2412.5	1.54
				3.99	25.50	118	772.7	1.97	3107.0	1.23
				2.84	31.90	94	966.6	1.59	3886.8	0.99
				2.12	38.20	79	1157.5	1.34	4654.4	0.83
				9.65	49.60	60	1502.9	1.04	6043.4	0.65

STD BACKLASH

* If kacc < 1, the acceleration torque must be reduced by limiting the current through the drive.

Cb Dynabloc - In-line output shaft
MI Integrated Mounting, 1 stage, Cb 3031 to 3431
Dimensions

S Foot form

Dimensions in mm

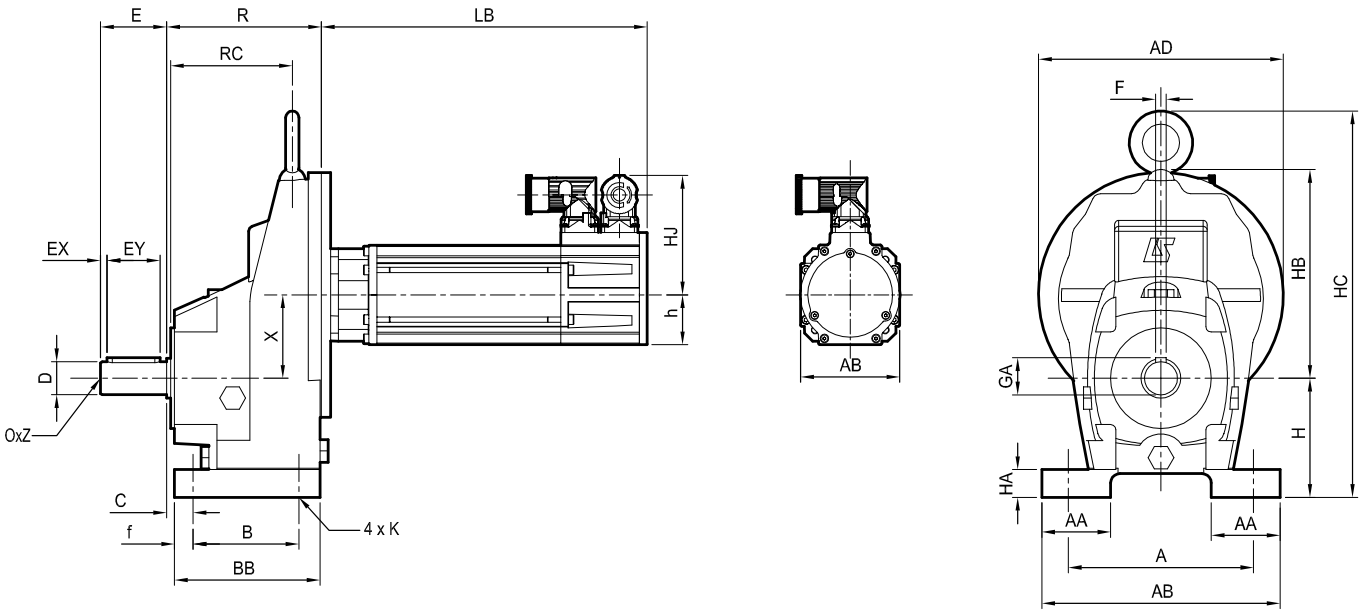

Type	Gearbox																Solid output shaft								Weight kg
	A	AA	AB	AD	B	BB	C	f	H	HA	HB	HC	K	R	RC	x	D	E	EX	EY	F	GA	O	Z	
Cb3031	125	25	150	140	70	90	21	10	75	13	105	-	9	79	-	35.5	16j6	40	7	25	5	18	M6	16	2.3
Cb3131	120	35	156	157	75	105	18	15	80	16	122	246	11	113	86	46.5	20j6	40	7	30	6	22.5	M6	16	6.9
Cb3231	140	37	180	185	80	115	20.5	17.5	90	20	155	292	14	117	92	63	25j6	50	5	40	8	28	M10	22	8.3
Cb3331	190	55	240	230	100	145	27.5	22	112	25	185	343	16	136	106	70	35k6	70	5	60	10	38	M12	38	15.5
Cb3431	216	67	257	280	125	167	28	18	132	32	221	392	18	160	114	87	40k6	80	9	60	12	43	M16	36	25

Motor type	Brushless motors with or without brake									
	Unimotor fm					Unimotor fm with brake				
	AB	HJ	h	LB	Weight kg	AB	HJ	h	LB	Weight kg
075 U3 B	75	89	37.5	247	3.7	75	89	37	277	4.2
095 U3 B	90	94	45	267	5.8	90	94	48	297	6.4
115 U3 B	115	99	45	293	8.8	115	99	58	323	10
115 U3 D	115	99	57.5	354	12.6	115	99	58	384	13.8
142 U3 E	142	113	71	327	20.7	142	113	71	387	22.5
190 U3 D	190	158	95	321	28.8	190	158	95	411	33.3

Cb Dynabloc - In-line output shaft
MI Integrated Mounting, 1 stage, Cb 3031 to 3431
Dimensions

BT tapped holes

Dimensions in mm

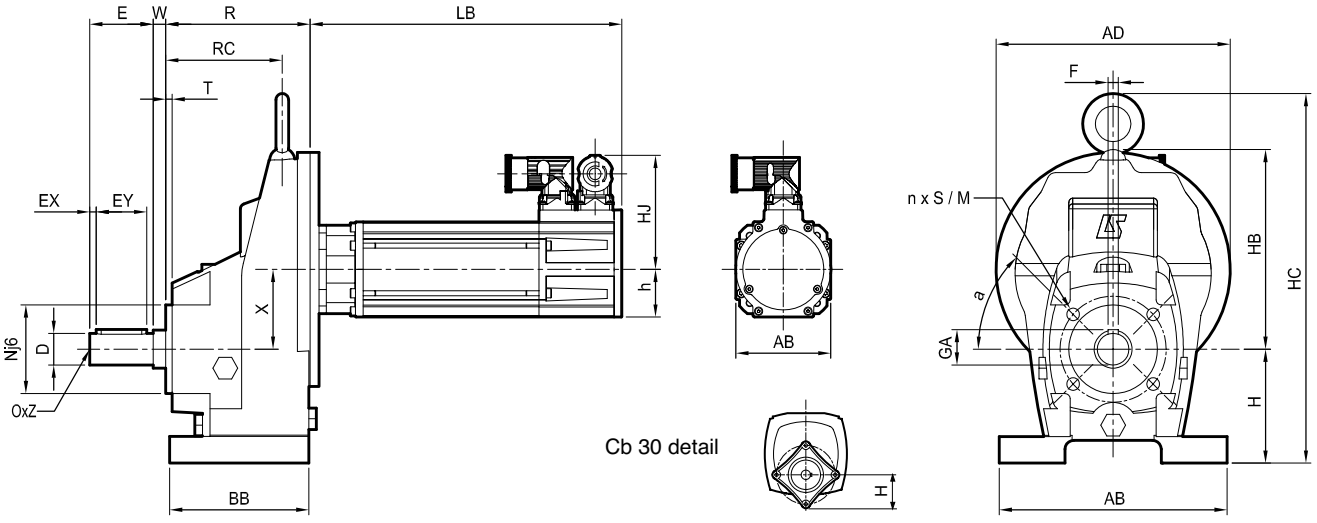

Type	Gearbox										BT Form						Solid output shaft								Weight kg
	AB	AD	BB	H	HB	HC	R	RC	W	x	M	N	n	S	T	a	D	E	EX	EY	F	GA	O	Z	
Cb3031	-	140	-	57	105	-	67	-	12	35.5	100	60	4	[1]	18	0°	16j6	40	7	25	5	18	M6	16	2.3
Cb3131	156	157	105	80	122	246	106	79	15	46.5	83	70	4	M10x22	5	45°	20j6	40	7	30	6	22.5	M6	16	6.9
Cb3231	180	185	115	90	155	292	109	84	15	63	83	70	4	M10x22	5	45°	25j6	50	5	40	8	28	M10	22	8.3
Cb3331	240	230	135	112	185	343	131	101	15	70	120	100	6	M10x22	3	60°	35k6	70	5	60	10	38	M12	38	15.5
Cb3431	257	280	167	132	221	392	152	122	28	87	152	130	6	M12x22	7	[2]	40k6	80	9	60	12	43	M16	36	25

1. 4 x Ø5,65 x 18 pour vis auto-taraudeuse M6 */ 4 x Ø5,65 x 18 for self tapping screw M6*
2. 6 trous / *6 holes* : a = 21°, a1 = 44°, a2 = 50°, a3 = 44°, a4 = 81°, a5 = 95°

Motor **type**	Brushless motors with or without brake									
	Unimotor fm					Unimotor fm with brake				
	AB	HJ	h	LB	Weight kg	AB	HJ	h	LB	Weight kg
075 U3 B	75	89	37.5	247	3.7	75	89	37	277	4.2
095 U3 B	90	94	45	267	5.8	90	94	48	297	6.4
115 U3 B	115	99	45	293	8.8	115	99	58	323	10
115 U3 D	115	99	57.5	354	12.6	115	99	58	384	13.8
142 U3 E	142	113	71	327	20.7	142	113	71	387	22.5
190 U3 D	190	158	95	321	28.8	190	158	95	411	33.3

Cb Dynabloc - In-line output shaft
MI Integrated Mounting, 1 stage, Cb 3031 to 3431
Dimensions

BS flange form

Dimensions in mm

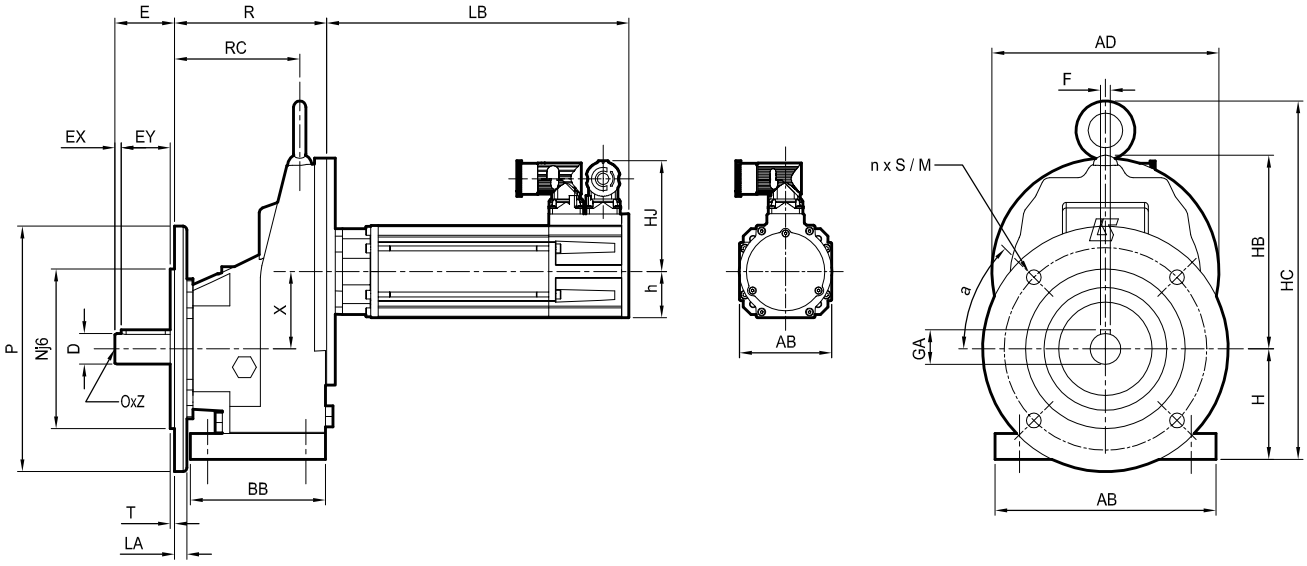

Type	Gearbox									BS Form								Solid output shaft								Weight kg
	AB	AD	BB	H	HB	HC	R	RC	x	LA	M	N	P	S	T	a	n	D	E	EX	EY	F	GA	O	Z	
Cb 3031	-	140	-	57	105	-	79	-	35.5	8	115	95	140	9	3	45°	4	16j6	40	7	25	5	18	M6	16	2.5
Cb 3131	156	157	105	80	122	246	121	94	46.5	10	130	110	160	9	3	45°	4	20j6	40	7	30	6	22.5	M6	16	8.1
Cb 3231	180	185	115	90	155	292	124	99	63	9	165	130	200	11	3.5	45°	4	25j6	50	5	40	8	28	M10	22	10.3
Cb 3331	240	230	145	112	185	343	146	116	70	12	215	180	250	14	3.5	45°	4	35k6	70	5	60	10	38	M12	38	19.4
Cb 3431	257	305	280	132	221	392	180	122	87	15	265	230	300	14	4	45°	4	40k6	80	9	60	12	43	M16	36	31

Motor type	Brushless motors with or without brake									
	Unimotor fm					Unimotor fm with brake				
	AB	HJ	h	LB	Weight kg	AB	HJ	h	LB	Weight kg
075 U3 B	75	89	37.5	247	3.7	75	89	37	277	4.2
095 U3 B	90	94	45	267	5.8	90	94	48	297	6.4
115 U3 B	115	99	45	293	8.8	115	99	58	323	10
115 U3 D	115	99	57.5	354	12.6	115	99	58	384	13.8
142 U3 E	142	113	71	327	20.7	142	113	71	387	22.5
190 U3 D	190	158	95	321	28.8	190	158	95	411	33.3

Cb Dynabloc - In-line output shaft
MI Integrated Mounting, multi-stages, Cb 3032 to 3433
Dimensions

S foot form

Dimensions in mm

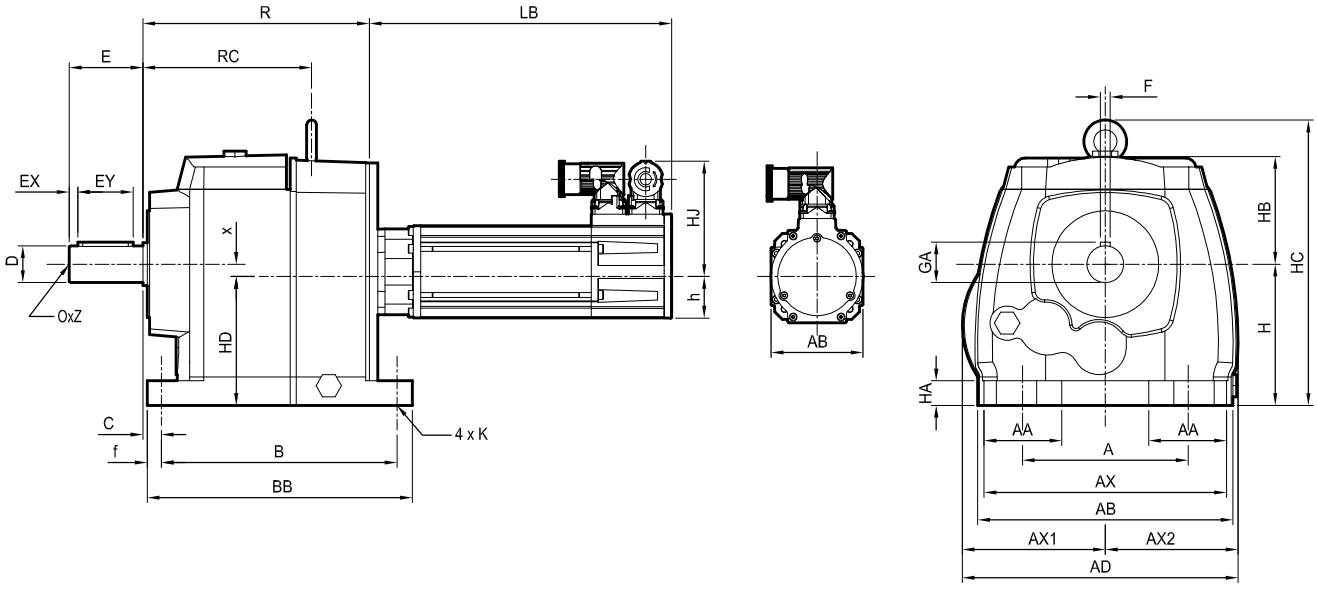

Type	Gearbox																				Weight kg
	A	AA	AB	AD	AX	AX1	AX2	B	BB	C	f	H	HA	HB	HC	HD	K	R	RC	x	
Cb 3032	125	28	150	150	-	75	75	105	125	22	10	75	13	78	-	82	9	107	-	– 7	4.8
Cb 3133	110	35	160	172	145	86	86	165	195	16	15	90	20	73	211.5	81.5	9	165.5	167	8.5	13
Cb 3233	135	65	208	222	195	115	107	192	216	13	11.5	115	21	89	240	105	14	182.5	135.5	10	18.5
Cb 3333	170	65	245	257	222	128.5	128.5	240	272	19.5	16	140	27	107	292	120.5	18	224.5	169.5	19.5	30
Cb 3433	230	80	288	305	270	152.5	152.5	235	276	25	20	180	35	122	358	154	18	251	193	26	50

Type	Solid output shaft							
	D	E	EX	EY	F	GA	O	Z
Cb 3032	20j6	40	7	25	6	22.5	M6	16
Cb 3133	25j6	50	5	40	8	28	M10	22
Cb 3233	30j6	60	6	45	8	33	M10	22
Cb 3333	40k6	80	9	60	12	43	M16	36
Cb 3433	50k6	100	4	90	14	53.5	M16	36

Motor **type**	Brushless motors with or without brake									
	Unimotor fm					Unimotor fm with brake				
	AB	HJ	h	LB	Weight kg	AB	HJ	h	LB	Weight kg
075 U3 B	75	89	37.5	247	3.7	75	89	37	277	4.2
095 U3 B	90	94	45	267	5.8	90	94	48	297	6.4
115 U3 B	115	99	45	293	8.8	115	99	58	323	10
115 U3 D	115	99	57.5	354	12.6	115	99	58	384	13.8
142 U3 E	142	113	71	327	20.7	142	113	71	387	22.5
190 U3 D	190	158	95	321	28.8	190	158	95	411	33.3

STD BACKLASH

Cb Dynabloc - In-line output shaft
MI Integrated Mounting, multi-stages, Cb 3032 to 3433
Dimensions

BT flange form

Dimensions in mm

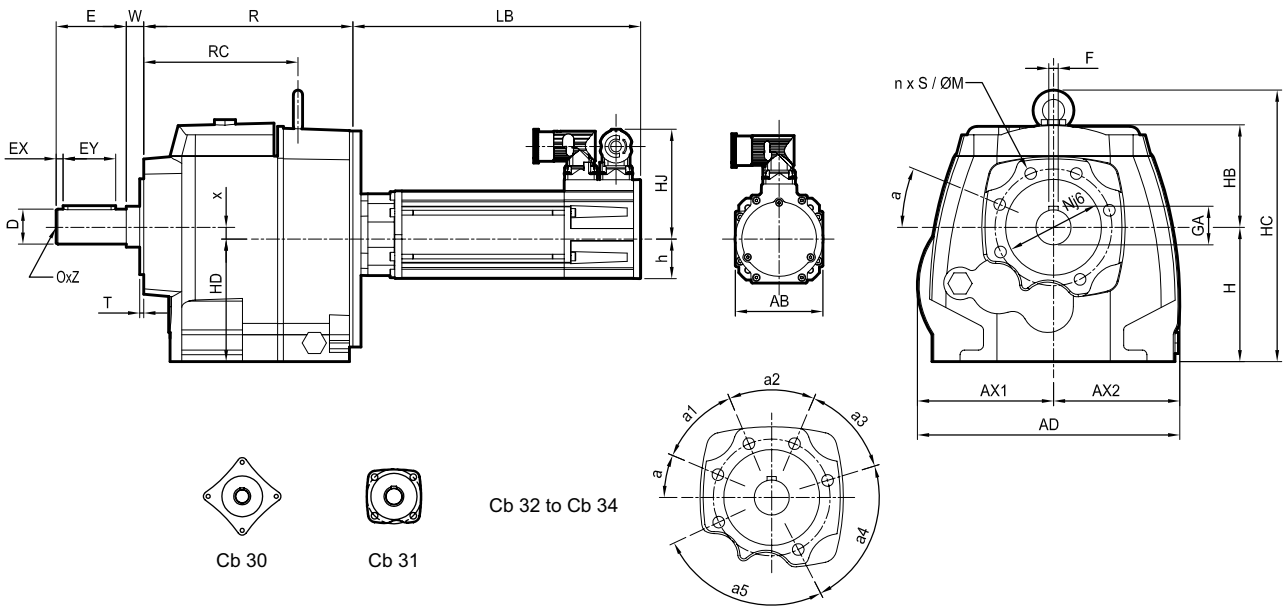

Cb 30

Cb 31

Cb 32 to Cb 34

Type	Gearbox											BT form											Weight
	AD	AX1	AX2	H	HB	HC	HD	R	RC	W	x	a	a1	a2	a3	a4	a5	M	N	n	S	T	kg
Cb 3032	140	70	70	63	78	-	70	95	-	12	– 7	0°	-	-	-	-	-	100	60	4	M6x16	10	4.7
Cb 3133	172	86	86	90	73	211.5	81.5	158.5	160	15	8.5	45°	-	-	-	-	-	83	70	4	M10x22	5	12.7
Cb 3233	222	115	107	115	89	240	105	177.5	130.5	15	10	23°	44°	46°	50°	80°	92°	100	82	6	M10x222	3.5	18.2
Cb 3333	257	128.5	128.5	140	107	292	120.5	227.5	174.5	23	19.5	23°	44°	46°	44°	68°	90°	123	100	6	M12x222	-3.5	29
Cb 3433	305	152.5	152.5	180	122	358	154	242	184	28	26	21° [1]	44°	50°	44°	81°	25°	152	130	6	M12x22	7	48

Type	Solid output shaft							
	D	E	EX	EY	F	GA	O	Z
Cb 3032	20j6	40	7	25	6	22.5	M6	16
Cb 3133	25j6	50	5	40	8	28	M10	22
Cb 3233	30j6	60	6	45	8	33	M10	22
Cb 3333	40k6	80	9	60	12	43	M16	36
Cb 3433	50k6	100	4	90	14	53.5	M16	36

Motor type	Brushless motors with or without brake									
	Unimotor fm					Unimotor fm with brake				
	AB	HJ	h	LB	Weight kg	AB	HJ	h	LB	Weight kg
075 U3 B	75	89	37.5	247	3.7	75	89	37	277	4.2
095 U3 B	90	94	45	267	5.8	90	94	48	297	6.4
115 U3 B	115	99	45	293	8.8	115	99	58	323	10
115 U3 D	115	99	57.5	354	12.6	115	99	58	384	13.8
142 U3 E	142	113	71	327	20.7	142	113	71	387	22.5
190 U3 D	190	158	95	321	28.8	190	158	95	411	33.3

STD BACKLASH

Cb Dynabloc - In-line output shaft
MI Integrated Mounting, multi-stages, Cb 3032 to 3433
Dimensions

BS flange form

Dimensions in mm

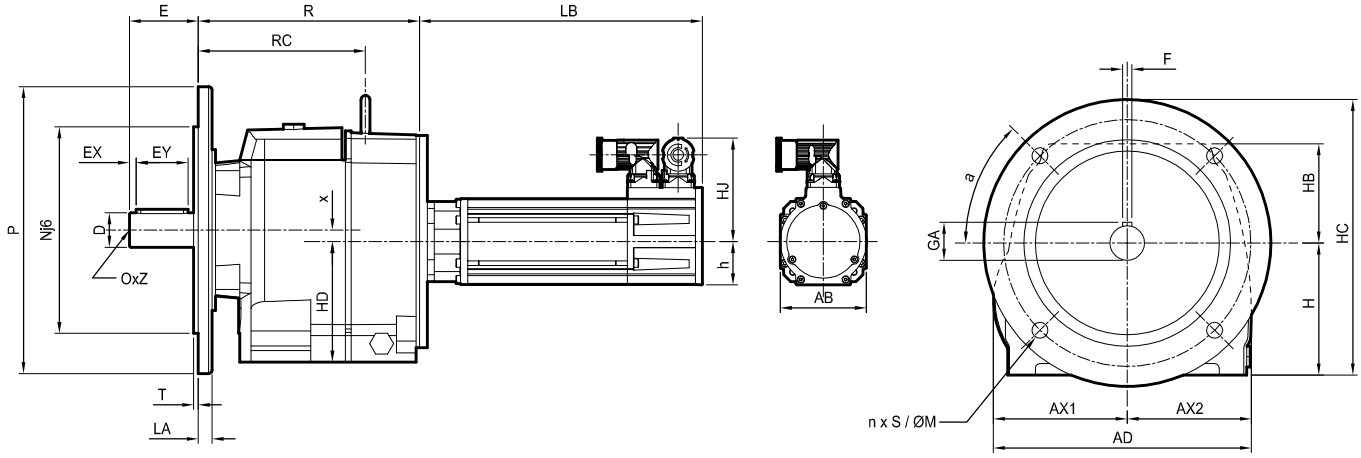

Type	Gearbox										BS form								Weight kg
	AD	AX1	AX2	H	HB	HC	HD	R	RC	x	LA	M	N	P	S	T	a	n	
Cb 3032	140	70	70	63	78	-	70	107	-	– 7	8	115	95	140	9	3	45°	4	4.8
Cb 3133	172	86	86	90	73	211.5	81.5	173.5	175	8.5	10	165	130	200	11	3.5	45°	4	13.4
Cb 3233	222	115	107	115	89	240	105	192.5	145	10	12	215	180	250	14	4	45°	4	18.8
Cb 3333	257	128.5	128.5	140	107	292	120.5	250.5	195	19.5	12	265	230	300	14	4	45°	4	34
Cb 3433	305	152.5	152.5	180	122	358	154	270	212	26	15	300	250	350	18	4	45°	4	56

Type	Solid output shaft							
	D	E	EX	EY	F	GA	O	Z
Cb 3032	20j6	40	7	25	6	22.5	M6	16
Cb 3133	25j6	50	5	40	8	28	M10	22
Cb 3233	30j6	60	6	45	8	33	M10	22
Cb 3333	40k6	80	9	60	12	43	M16	36
Cb 3433	50k6	100	4	90	14	53.5	M16	36

Motor type	Brushless motors with or without brake									
	Unimotor fm					Unimotor fm with brake				
	AB	HJ	h	LB	Weight kg	AB	HJ	h	LB	Weight kg
075 U3 B	75	89	37.5	247	3.7	75	89	37	277	4.2
095 U3 B	90	94	45	267	5.8	90	94	48	297	6.4
115 U3 B	115	99	45	293	8.8	115	99	58	323	10
115 U3 D	115	99	57.5	354	12.6	115	99	58	384	13.8
142 U3 E	142	113	71	327	20.7	142	113	71	387	22.5
190 U3 D	190	158	95	321	28.8	190	158	95	411	33.3

Ot Dynabloc Servo gearbox
Right angle integrated mounting output shaft
General

Ot Dynabloc

• A high efficiency right angle solution

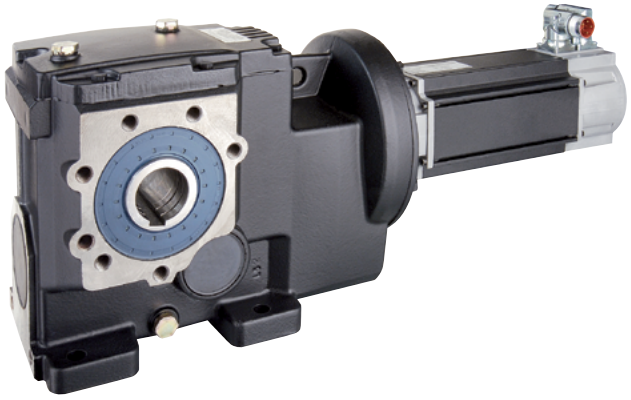

- **High efficiency**
- **Space-saving right angle design**
- **Rugged design**
- **Integrated mounting**
- **Unimotor fm**

STD BACKLASH

Ot Dynabloc servo gearboxes are designed to reduce the speed and increase the torque of servo motors and to optimize the ratio of inertia between the driven load and the motor.
Ot Dynabloc bevel gearboxes provide a high efficiency solution for applications requiring standard backlash. The gearboxes offer advantages in terms of space saving and ease of integration thanks to their right angle design and integrated servo motor mounting. A variety of mounting positions and shafts are available.
Ot Dynabloc gearboxes are available with Unimotor fm motors for continuous duty applications with high inertia loads. Standard motor speed for D+20 lead time is 3000 rpm.

Description	
Range	5 sizes from 3132 to 3533
Gearbox ratio	Ratios from 5 to 101
Nominal torque	Up to 2575 N.m
Backlash	STANDARD : 10 to 30′, depending on sizes and ratio
Lubrication	Supplied with ISO VG 220 mineral oil, depending on operating position
Efficiency	~ 95 %
Output shaft	Hollow or solid shaft with key or hollow shaft and shrink disk Tolerances of diameter NFE22-051 and ISO R 775 Key ISO R 773
Unimotor fm	Nominal speed 3000 rpm Connectors rotatable by 90° Incremental or absolute encoder Motor with or without brake Integrated mounting
Finish	Painted (RAL 9005 black)

Ot Dynabloc Servo gearbox
Technical characteristics

Gearbox type	Exact ratio	Efficiency	Angular backlash arcmin STANDARD	Max. radial load F_r at E/2 N	Max. axial load F_a N
Ot 3132	5.1	0.95	22	6233	3117
	7.23		20	6240	3120
	9.72		20	6116	3058
	12.5		18	6149	3075
	16.1		16	6085	3043
	20.3		16	6007	3004
	24.6		16	5928	2964
	30.7		15	5816	2908
	39.1		15	5668	2834
	49.4		15	5311	2656
Ot 3232	7.05	0.95	17	8342	4171
	10.1		17	8489	4245
	12.4		17	8459	4230
	15.6		17	8413	4207
	19.7		15	8359	4180
	26		15	8274	4137
	31.5		15	8203	4102
Ot 3233	16.1	0.95	15	6782	3391
	20.4		15	7188	3594
	24.1		15	7849	3925
	30.8		15	7888	3944
	39.5		15	8606	4303
	51		15	8452	4226
	64.3		14	8274	4137
	77.7		14	8090	4045
	97.2		14	7824	3912
Ot 3333	12.3	0.95	15	10174	5087
	16.1		14	11018	5509
	20.3		14	11797	5899
	24.3		14	11781	5891
	30.6		14	10552	5276
	38.3		13	11729	5865
	50.3		13	11469	5735
	61		13	11234	5617
	77		13	10877	5439
	96.4		13	10433	5217
Ot 3433	9.51	0.95	13	10861	5431
	12.3		12	11255	5628
	15.5		11	11496	5748
	19.3		11	12066	6033
	24.8		11	12692	6346
	31.5		11	13113	6557
	39.9		11	14828	7414
	50.6		10	17236	8618
	61.9		11	17393	8697
	77.5		10	19906	9953
	95.4		10	20008	10004
Ot 3533	16.6	0.95	11	14872	7436
	20.8		11	18151	9076
	24.3		10	18187	9094
	30.5		11	21076	10538
	38.6		10	20369	10185
	49.8		10	22569	11285
	62.4		9	22275	11138
	80.6		9	21849	10925
	101		9	22143	11072

Ot Dynabloc Servo gearbox
Mounting form - Operating positions

Side identification

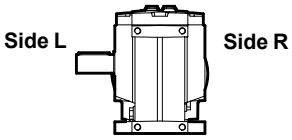

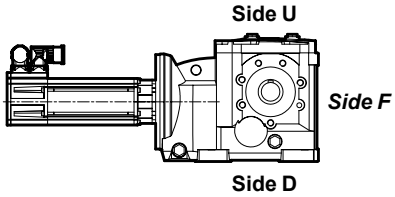

Mounting form

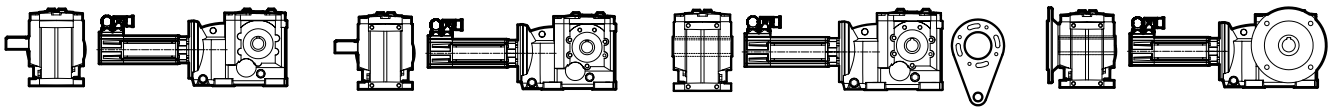

S
Foot

SBT
Foot and tapped holes

RK
Torque arm (delivered as kit)

BS, BD
Flange

Output shaft

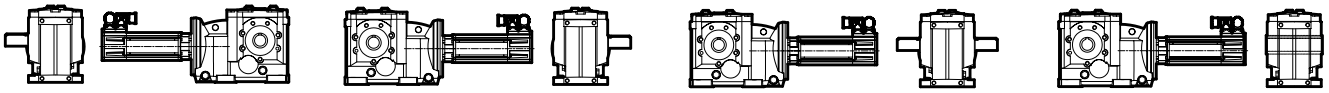

L
Solid shaft left

R
Solid shaft right

LR
Solid shaft left and right

H
Hollow shaft

Options

SDR
Hollow shaft with shrink disk right

SDL
Hollow shaft with shrink disk left

Operating position

S, SBT, RK mounting form

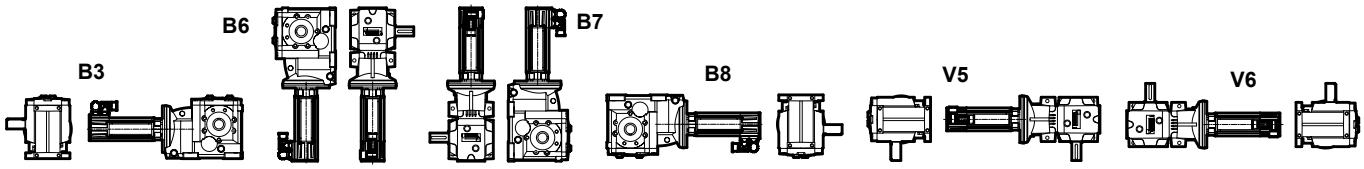

BS, BD mounting form

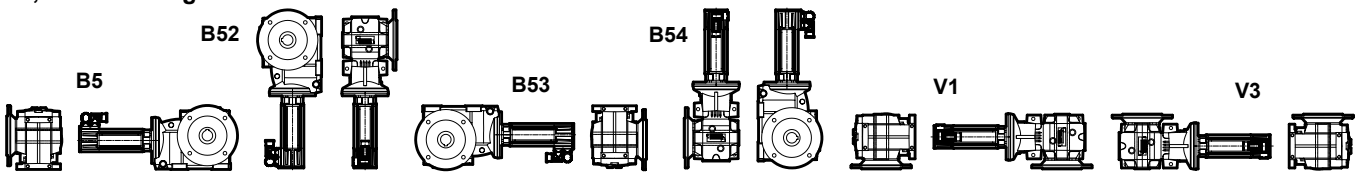

Connectors position

A : STANDARD

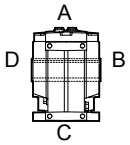

Ot Dynabloc Servo gearbox
Ordering code information

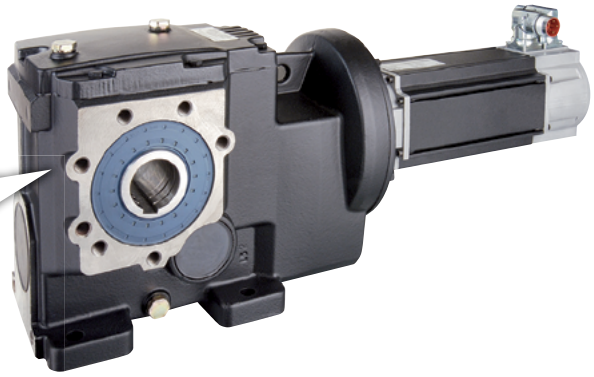

Gearbox

Ot	3233	B5	SBT	LR	H	79.4	MI
Gearbox type	Size **3132, 3232, 3233, 3333, 3433, 3533**	Operating position **B3, B6, B7, B8, V5, V6** **B5, B52, B53, B54, V1, V3**	Mounting form **S, BS, BD, SBT, RK**	Mounting position **L, R, LR**	Output shaft **L, R, H, LR, SDL, SDR**	Exact ratio **5 to 101**	Motor input type **MI**

Motor: Unimotor fm

095	U3	B	30	0	B	R	CA	A
Unimotor fm **075, 095, 115, 142, 190**	Unimotor fm voltage* **U3** = 400 V	Stator length **A, B, C, D, E**	Nominal speed* **30** = 3000 rpm	Brake 24 V **0** = Without brake **5** = Parking brake	Connection type* **B** = Power and Signal 90° rotatable (**J** = for Motor 190 U3)	Output shaft **R** = Integrated mounting	Feedback device See Servo Drives and Motors technical catalogue	Inertia **A/C** = Standard **B/D** = High

**For the full range of motor options, please refer to the Servo Drives and Motors Technical Catalogue*

STD BACKLASH

We reserve the right to modify the design, technical specifications and dimensions of the products shown in this document.
The description cannot in any way be considered contractual.

Ot 3132 - Ot 3232
Selection

Motor speed 3000 rpm

D+20 lead time (Ex Works)

Ot 3132 M_{Red-S1} 210 N.m max

Motor type	Motor nominal torque	Motor peak torque	Motor inertia	Gearbox inertia	Exact ratio	Output speed	S1		S5	
							Gearbox nominal torque	Duty factor	Acceleration torque at gearbox	Duty factor at acceleration
	$M_{n\,mot}$	$M_{peak\,mot}$	J_{mot}	J_{red}	I_{exact}	n_2	$M_{n\,red}$	k_{S1}	$M_{acc\,red}$	k_{acc}*
	N.m	N.m	10^{-4} kg.m^2	10^{-4} kg.m^2		rpm	N.m		N.m	
075 U3 B 30	2.3	7	1.22	To be advised	16.1	186	34.8	4.23	106.0	3.48
					20.3	148	43.9	3.63	133.7	2.98
					24.6	122	53.2	3.20	162.0	2.63
					30.7	98	66.4	2.76	202.2	2.27
					39.1	77	84.6	2.34	257.5	1.92
					49.4	61	106.9	1.98	325.4	1.63
095 U3 B 30	4.1	13.5	2.6		7.23	415	27.9	3.98	91.8	3.02
					12.5	240	48.2	2.81	158.8	2.13
					16.1	186	62.1	2.37	204.5	1.80
					20.3	148	78.3	2.04	257.9	1.55
					24.6	122	94.9	1.80	312.5	1.36
					30.7	98	118.4	1.55	390.0	1.17
					39.1	77	150.8	1.31	496.7	1.00
115 U3 B 30	6.7	22.2	7.7		5.1	588	32.2	2.99	106.5	2.26
					7.23	415	45.6	2.43	151.0	1.84
					9.72	309	61.3	2.02	203.0	1.52
					12.5	240	78.8	1.72	261.1	1.30
					16.1	186	101.5	1.45	336.3	1.10
					20.3	148	128.0	1.25	424.0	0.94
					24.6	122	155.1	1.10	513.8	0.83
115 U3 D 30	11.2	41	12.5		5.1	588	53.7	1.79	196.7	1.22
					7.23	415	76.2	1.46	278.9	0.99
					9.72	309	102.4	1.21	375.0	0.82
					12.5	240	131.7	1.03	482.2	0.70

Ot 3232 M_{Red-S1} 360 N.m max

Motor type	Motor nominal torque	Motor peak torque	Motor inertia	Gearbox inertia	Exact ratio	Output speed	S1		S5	
							Gearbox nominal torque	Duty factor	Acceleration torque at gearbox	Duty factor at acceleration
	$M_{n\,mot}$	$M_{peak\,mot}$	J_{mot}	J_{red}	I_{exact}	n_2	$M_{n\,red}$	k_{S1}	$M_{acc\,red}$	k_{acc}*
	N.m	N.m	10^{-4} kg.m^2	10^{-4} kg.m^2		rpm	N.m		N.m	
095 U3 B 30	4.1	13.5	2.6	To be advised	19.7	152	76.0	4.75	250.2	3.60
					26	115	100.3	3.60	330.3	2.73
					31.5	95	121.5	2.97	400.1	2.25
115 U3 B 30	6.7	22.2	7.7		12.4	242	78.2	4.62	259.0	3.48
					15.6	192	98.3	3.67	325.9	2.77
					19.7	152	124.2	2.91	411.5	2.19
					26	115	163.9	2.20	543.1	1.66
					31.5	95	198.6	1.82	658.0	1.37
115 U3 D 30	11.2	41	12.5		7.05	426	74.3	4.81	272.0	3.28
					10.1	297	106.4	3.39	389.6	2.32
					12.4	242	130.7	2.76	478.4	1.89
					15.6	192	164.4	2.19	601.8	1.50
					19.7	152	207.6	1.74	760.0	1.19
					26	115	274.0	1.32	1003.0	0.90

* If kacc < 1, the acceleration torque must be reduced by limiting the current through the drive.

Ot 3233
Selection

Motor speed 3000 rpm

D+20 lead time (Ex Works)

Ot 3233 M_{Red-S1} 445 N.m max

Motor type	Motor nominal torque	Motor peak torque	Motor inertia	Gearbox inertia	Exact ratio	Output speed	S1		S5	
							Gearbox nominal torque	Duty factor	Acceleration torque at gearbox	Duty factor at acceleration
	$M_{n\,mot}$	$M_{peak\,mot}$	J_{mot}	J_{red}	I_{exact}	n_2	$M_{n\,red}$	k_{S1}	$M_{acc\,red}$	k_{acc}*
	N.m	N.m	10^{-4} kg.m^2	10^{-4} kg.m^2		rpm	N.m		N.m	
075 U3 B 30	2.3	7	1.22	0.37	51	59	107.1	4.11	325.8	3.38
				0.27	64.3	47	135.0	3.28	410.8	2.69
				0.2	77.7	39	163.1	2.72	496.4	2.24
				0.15	97.2	31	204.0	2.19	621.0	1.80
095 U3 B 30	4.1	13.5	2.6	1.02	24.1	124	90.2	4.07	296.9	3.09
				0.52	39.5	76	147.8	2.88	486.7	2.19
				0.37	51	59	190.8	2.31	628.4	1.75
				0.27	64.3	47	240.6	1.84	792.2	1.40
				0.2	77.7	39	290.8	1.53	957.3	1.16
				0.15	97.2	31	363.7	1.23	1197.6	0.93
115 U3 B 30	6.7	22.2	7.7	1.71	16.1	186	98.5	3.30	326.2	2.49
				1.25	20.4	147	124.7	2.80	413.3	2.11
				1.02	24.1	124	147.4	2.49	488.3	1.88
				0.72	30.8	97	188.3	2.10	624.0	1.58
				0.52	39.5	76	241.5	1.76	800.3	1.33
				0.37	51	59	311.9	1.41	1033.3	1.06
				0.27	64.3	47	393.2	1.13	1302.8	0.85
115 U3 D 30	11.2	41	12.5	1.71	16.1	186	164.6	1.98	602.5	1.35
				1.25	20.4	147	208.5	1.67	763.4	1.14
				1.02	24.1	124	246.3	1.49	901.8	1.02
				0.72	30.8	97	314.8	1.25	1152.5	0.86
				0.52	39.5	76	403.8	1.05	1478.1	0.72

STD BACKLASH

* If kacc < 1, the acceleration torque must be reduced by limiting the current through the drive.

Ot 3333
Selection

Motor speed 3000 rpm

D+20 lead time (Ex Works)

Ot 3333 M_{Red-S1} 795 N.m max

Motor type	Motor nominal torque	Motor peak torque	Motor inertia	Gearbox inertia	Exact ratio	Output speed	S1		S5	
							Gearbox nominal torque	Duty factor	Acceleration torque at gearbox	Duty factor at acceleration
	$M_{n\,mot}$	$M_{peak\,mot}$	J_{mot}	J_{red}	I_{exact}	n_2	$M_{n\,red}$	k_{S1}	$M_{acc\,red}$	k_{acc}*
	N.m	N.m	10^{-4} kg.m^2	10^{-4} kg.m^2		rpm	N.m		N.m	
075 U3 B 30	2.3	7	1.22	0.8	77	39	161.6	4.91	491.9	4.04
				0.57	96.4	31	202.4	3.94	615.9	3.24
095 U3 B 30	4.1	13.5	2.6	1.39	50.3	60	188.2	4.17	619.8	3.17
				1.08	61	49	228.3	3.46	751.6	2.63
				0.8	77	39	288.1	2.76	948.7	2.09
				0.57	96.4	31	360.7	2.21	1187.8	1.68
115 U3 B 30	6.7	22.2	7.7	4.31	20.3	148	124.1	4.99	411.3	3.77
				3.46	24.3	123	148.6	4.40	492.4	3.32
				1.37	32.7	92	200.0	3.45	662.5	2.61
				1.96	38.3	78	234.2	3.20	776.0	2.42
				1.39	50.3	60	307.6	2.55	1019.1	1.93
				1.08	61	49	373.0	2.12	1235.9	1.60
				0.8	77	39	470.8	1.69	1560.1	1.27
				0.57	96.4	31	589.5	1.35	1953.2	1.02
115 U3 D 30	11.2	41	12.5	4.86	12.3	244	125.7	4.36	460.3	2.97
				5.68	16.1	186	164.6	3.51	602.5	2.40
				4.31	20.3	148	207.5	2.99	759.6	2.04
				3.46	24.3	123	248.4	2.63	909.3	1.80
				1.48	30.6	98	312.8	2.24	1145.0	1.53
				1.96	38.3	78	391.5	1.92	1433.2	1.31
				1.39	50.3	60	514.2	1.53	1882.2	1.04
				1.08	61	49	623.5	1.27	2282.6	0.86
				0.8	77	39	787.1	1.01	2881.3	0.69

STD BACKLASH

* If kacc < 1, the acceleration torque must be reduced by limiting the current through the drive.

Ot 3433
Selection

Motor speed 3000 rpm

D+20 lead time (Ex Works)

Ot 3433 M_{Red-S1} 1590 N.m max

Motor type	Motor nominal torque	Motor peak torque	Motor inertia	Gearbox inertia	Exact ratio	Output speed	S1		S5	
							Gearbox nominal torque	Duty factor	Acceleration torque at gearbox	Duty factor at acceleration
	$M_{n\,mot}$	$M_{peak\,mot}$	J_{mot}	J_{red}	I_{exact}	n_2	$M_{n\,red}$	k_{S1}	$M_{acc\,red}$	k_{acc}*
	N.m	N.m	10^{-4} kg.m^2	10^{-4} kg.m^2		rpm	N.m		N.m	
095 U3 B 30	4.1	13.5	2.6	1	95.4	31	357.0	4.45	1175.4	3.38
115 U3 B 30	6.7	22.2	7.7	2.41	50.6	59	309.4	4.28	1025.2	3.23
				1.86	61.9	48	378.5	3.71	1254.2	2.80
				1.35	77.5	39	473.9	3.17	1570.3	2.39
				1	95.4	31	583.4	2.73	1932.9	2.06
115 U3 D 30	11.2	41	12.5	7.48	20.1	149	205.5	4.88	752.1	3.33
				5.81	24.8	121	253.5	4.21	928.0	2.88
				2.67	31	97	316.9	3.49	1160.0	2.38
				3.27	39.9	75	407.9	3.02	1493.0	2.06
				2.41	50.6	59	517.2	2.56	1893.4	1.75
				1.86	61.9	48	632.7	2.22	2316.3	1.52
				1.35	77.5	39	792.2	1.90	2900.0	1.30
				1	95.4	31	975.2	1.63	3569.8	1.11
142 U3 E 30	18.2	75	36.9	13.15	9.51	315	158.0	4.91	651.0	2.98
				9.16	12.3	244	204.3	4.10	841.9	2.49
				10.34	15.5	194	257.5	3.60	1061.0	2.19
				#N/A	19.3	155	320.6	2.99	1321.1	1.81
				5.81	24.8	121	411.9	2.59	1697.6	1.57
				4.34	31.5	95	523.2	2.19	2156.2	1.33
				3.27	39.9	75	662.8	1.86	2731.2	1.13
				2.41	50.6	59	840.5	1.57	3463.6	0.95
				1.86	61.9	48	1028.2	1.37	4237.1	0.83
				1.35	77.5	39	1287.3	1.17	5304.9	0.71
				1	95.4	31	1584.7	1.00	6530.2	0.61

STD BACKLASH

* If kacc < 1, the acceleration torque must be reduced by limiting the current through the drive.

Ot 3533
Selection

Motor speed 3000 rpm

D+20 lead time (Ex Works)

Ot 3533 M_{Red-S1} 2575 N.m max

Motor type	Motor nominal torque	Motor peak torque	Motor inertia	Gearbox inertia	Exact ratio	Output speed	S1		S5	
							Gearbox nominal torque	Duty factor	Acceleration torque at gearbox	Duty factor at acceleration
	$M_{n\,mot}$	$M_{peak\,mot}$	J_{mot}	J_{red}	I_{exact}	n_2	$M_{n\,red}$	k_{S1}	$M_{acc\,red}$	k_{acc}*
	N.m	N.m	10^{-4} kg.m^2	10^{-4} kg.m^2		rpm	N.m		N.m	
115 U3 B 30	6.7	22.2	7.7	2.56	101	30	617.6	4.17	2046.4	3.15
115 U3 D 30	11.2	41	12.5	6.94	49.8	60	509.1	4.90	1863.5	3.34
				5.1	62.4	48	637.8	3.95	2335.0	2.70
				3.55	80.6	37	823.9	3.10	3016.0	2.12
				2.56	101	30	1032.4	2.50	3779.4	1.70
142 U3 E 30	18.2	75	36.9	7.73	30.5	98	506.6	4.41	2087.7	2.67
				9.74	38.6	78	641.2	3.74	2642.2	2.27
				6.94	49.8	60	827.2	3.01	3408.8	1.83
				5.1	62.4	48	1036.5	2.43	4271.3	1.48
				3.55	80.6	37	1338.8	1.91	5517.1	1.16
				2.56	101	30	1677.7	1.54	6913.5	0.93
190 U3 D 30	33.2	133.5	86.8	18.16	16.6	181	503.0	4.07	2022.6	2.53
				13.17	20.8	144	630.3	3.48	2534.3	2.16
				18.14	24.3	123	736.3	2.83	2960.8	1.76
				7.73	30.5	98	924.2	2.42	3716.2	1.50
				9.74	38.6	78	1169.6	2.05	4703.1	1.27
				6.94	49.8	60	1509.0	1.65	6067.7	1.03
				5.1	62.4	48	1890.8	1.33	7602.9	0.83
				3.55	80.6	37	2442.2	1.04	9820.5	0.65

STD BACKLASH

* If kacc < 1, the acceleration torque must be reduced by limiting the current through the drive.

Ot Dynabloc - Right angle integrated mounting output shaft
MI Integrated Mounting, Ot 3132 to Ot 3533
Dimensions

Foot and tapped holes form SBT
Hollow shaft H

Dimensions in mm

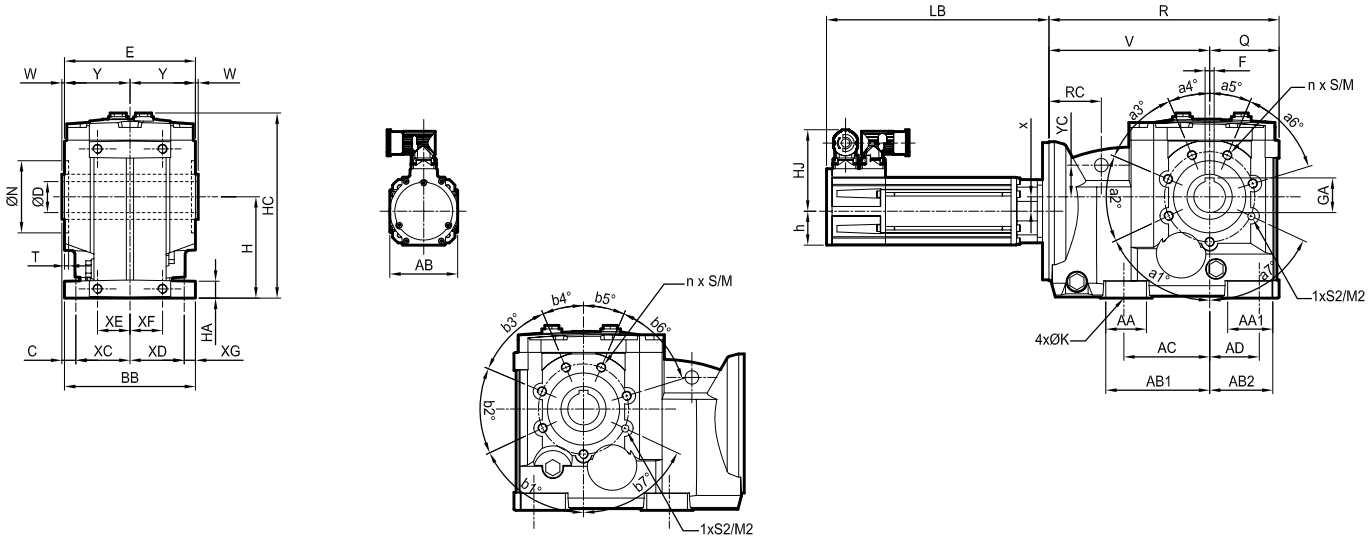

Type	Gearbox																	
	AA	AA1	AB1	AB2	AC	AD	BB	C	H	HA	HC	K	M	M2	N	n	Q	R
Ot 3132	39	30	69	61	50	50	118	15.0	80	15	204	9	95	95	85	4	80	245
Ot 3232	45	67	115	87	95	55	145	15.5	112	21	267	11	100	102	80	6	93	290
Ot 3233	46	50	116	69	95	55	145	15.5	112	18.5	205	11	100	102	80	6	77	255
Ot 3333	62	67	124	82	90	60	168	16.5	140	21.5	245	14	123	123	100	6	90	304
Ot 3433	57	82	140	105	110	80	200	30.5	180	27	306	18	152	152	130	6	114	350
Ot 3533	71	92	165	128	125	105	220	32	212	30	346	22	190	190	155	6	132	405

Type	Gearbox													Weight kg
	RC	S	S2	T	V	W	x	XC	XD	XE	XF	XG	Y	YC	
Ot 3132	69	M8x12	6x12	3.5	165	5	46.5	60	60	50	50	9	60	66	14
Ot 3232	77	M10x22	8x20	4.5	197	3	63	60	60	36	36	12.5	72.5	85	22
Ot 3233	58	M10x22	8x20	4.5	178	3	16	60	60	36	36	12.5	72.5	35	20.5
Ot 3333	65	M12x22	∅10.2x27	4.5	215	1.5	7	70	70	45	45	14	85	50	36
Ot 3433	59	M12x22	∅10.2x27	7	236	9.5	30	82.5	82.5	50	50	17.5	103.5	60	58
Ot 3533	73	M16x27	∅10.2x30	7	273	9.5	37	90	90	62.5	62.5	20	112.5	67	80

Type	Gearbox													Output shaft			
	a1	a2	a3	a4	a5	a6	a7	b1	b2	b3	b4	b5	b6	b7	D	E	F	GA
Ot 3132	45°	45°	45°	45°	45°	45°	45°	45°	45°	45°	45°	45°	45°	45°	30H7	120	8	33.3
Ot 3232	65°	48°	44°	23°	23°	50°	25°	65°	48°	44°	23°	23°	50°	25°	35H7	145	10	38.3
Ot 3233	65°	48°	44°	23°	23°	50°	25°	65°	48°	44°	23°	23°	50°	25°	35H7	145	10	38.3
Ot 3333	65°	25°	44°	23°	23°	44°	45°	0°	45°	25°	44°	23°	23°	44°	40H7	170	12	43.3
Ot 3433	46°	44°	25°	25°	44°	30°	30°	65°	46°	44°	25°	25°	44°	30°	50H7	207	14	53.8
Ot 3533	52°	44°	25°	25°	44°	30°	30°	0°	52°	44°	25°	25°	44°	30°	60H7	225	18	64.4

Motor type	Brushless motors with or without brake									
	Unimotor fm					Unimotor fm with brake				
	AB	HJ	h	LB	Weight kg	AB	HJ	h	LB	Weight kg
075 U3 B	75	89	37.5	247	3.7	75	89	37	277	4.2
095 U3 B	90	94	45	267	5.8	90	94	48	297	6.4
115 U3 B	115	99	45	293	8.8	115	99	58	323	10
115 U3 D	115	99	57.5	354	12.6	115	99	58	384	13.8
142 U3 E	142	113	71	327	20.7	142	113	71	387	22.5
190 U3 D	190	158	95	321	28.8	190	158	95	411	33.3

STD BACKLASH

Ot Dynabloc - Right angle integrated mounting output shaft
MI Integrated Mounting, Ot 3132 to Ot 3533
Dimensions

Foot and tapped holes form SBT
Plain shaft left L

Dimensions in mm

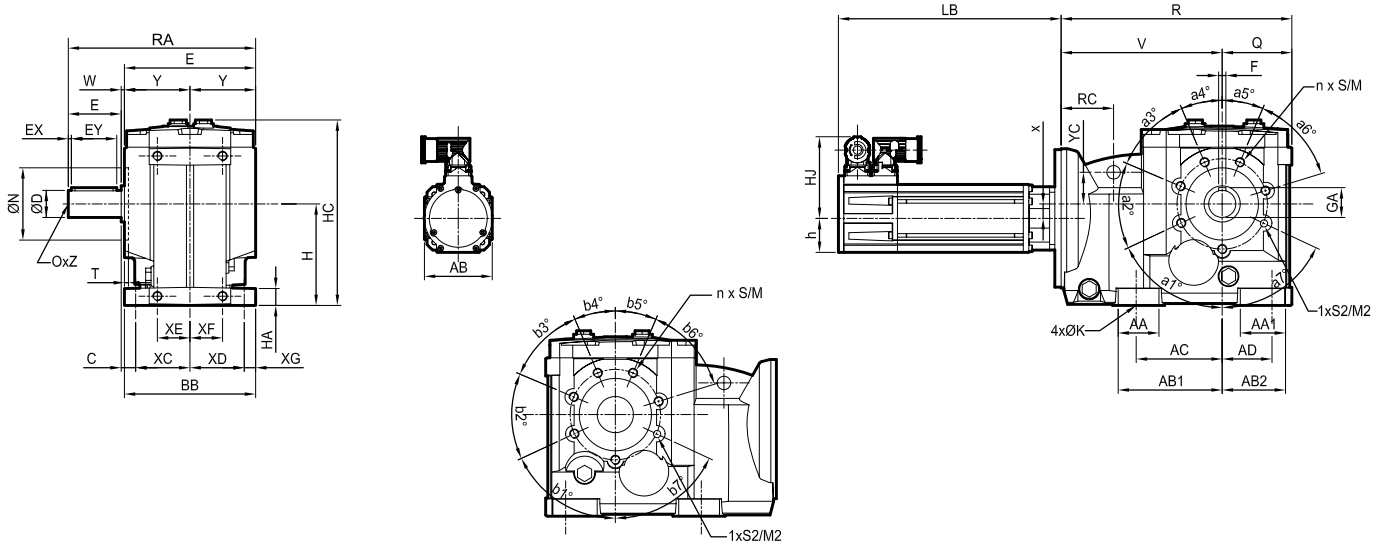

Type	Gearbox																		
	AA	AA1	AB1	AB2	AC	AD	BB	C	H	HA	HC	K	M	M2	N	n	Q	R	RA
Ot 3132	39	30	69	61	50	50	118	15	80	15	204	9	95	95	85	4	80	245	175
Ot 3232	45	67	115	87	95	55	145	15.5	112	21	267	11	100	102	80	6	93	290	
Ot 3233	46	50	116	69	95	55	145	15.5	112	18.5	205	11	100	102	80	6	77	255	207
Ot 3333	62	67	124	82	90	60	168	16.5	140	21.5	245	14	123	123	100	6	90	304	251.5
Ot 3433	57	82	140	105	110	80	200	30.5	180	27	306	18	152	152	130	6	114	350	316
Ot 3533	71	92	165	128	125	105	220	32	212	30	346	22	190	190	155	6	132	405	354.5

Type	Gearbox													Weight kg
	RC	S	S2	T	V	W	x	XC	XD	XE	XF	XG	Y	YC	
Ot 3132	69	M8x12	6x12	3.5	165	5	46.5	60	60	50	50	9	60	66	14
Ot 3232	77	M10x22	8x20	4.5	197	3	63	60	60	36	36	12.5	72.5	85	22
Ot 3233	58	M10x22	8x20	4.5	178	2	16	60	60	36	36	12.5	72.5	35	20.5
Ot 3333	65	M12x22	∅10.2x27	4.5	215	1.5	7	70	70	45	45	14	85	50	38
Ot 3433	59	M12x22	∅10.2x27	7	236	9	30	82.5	82.5	50	50	17.5	103.5	60	60
Ot 3533	73	M16x27	∅10.2x30	7	273	9.5	37	90	90	62.5	62.5	20	112.5	67	83

	Gearbox													Solid output shaft							
Type	a1	a2	a3	a4	a5	a6	a7	b1	b2	b3	b4	b5	b6	b7	D	E	EX	EY	F	GA	O	Z
Ot 3132	45°	45°	45°	45°				45°	45°	45°	45°				25	50	5	40	8	28	M10	22
Ot 3232	65°	48°	44°	23°	23°	50°	25°	65°	48°	44°	23°	23°	50°	25°	30	60	3.5	50	8	33	M10	22
Ot 3233	65°	48°	44°	23°	23°	50°	25°	65°	48°	44°	23°	23°	50°	25°	30	60	3.5	50	8	33	M10	22
Ot 3333	65°	25°	44°	23°	23°	44°	45°	0°	45°	25°	44°	23°	23°	44°	40	80	4	70	12	43	M16	36
Ot 3433	46°	44°	25°	25°	44°	30°	30°	65°	46°	44°	25°	25°	44°	30°	50	100	5	90	14	53.5	M16	36
Ot 3533	52°	44°	25°	25°	44°	30°	30°	0°	52°	44°	25°	25°	44°	30°	60	120	5	110	18	64	M20	42

Motor type	Brushless motors with or without brake									
	Unimotor fm					Unimotor fm with brake				
	AB	HJ	h	LB	Weight kg	AB	HJ	h	LB	Weight kg
075 U3 B	75	89	37.5	247	3.7	75	89	37	277	4.2
095 U3 B	90	94	45	267	5.8	90	94	48	297	6.4
115 U3 B	115	99	45	293	8.8	115	99	58	323	10
115 U3 D	115	99	57.5	354	12.6	115	99	58	384	13.8
142 U3 E	142	113	71	327	20.7	142	113	71	387	22.5
190 U3 D	190	158	95	321	28.8	190	158	95	411	33.3

Ot Dynabloc - Right angle integrated mounting output shaft
MI Integrated Mounting, Ot 3132 to Ot 3533
Dimensions

BS flange
Hollow shaft H

Dimensions in mm

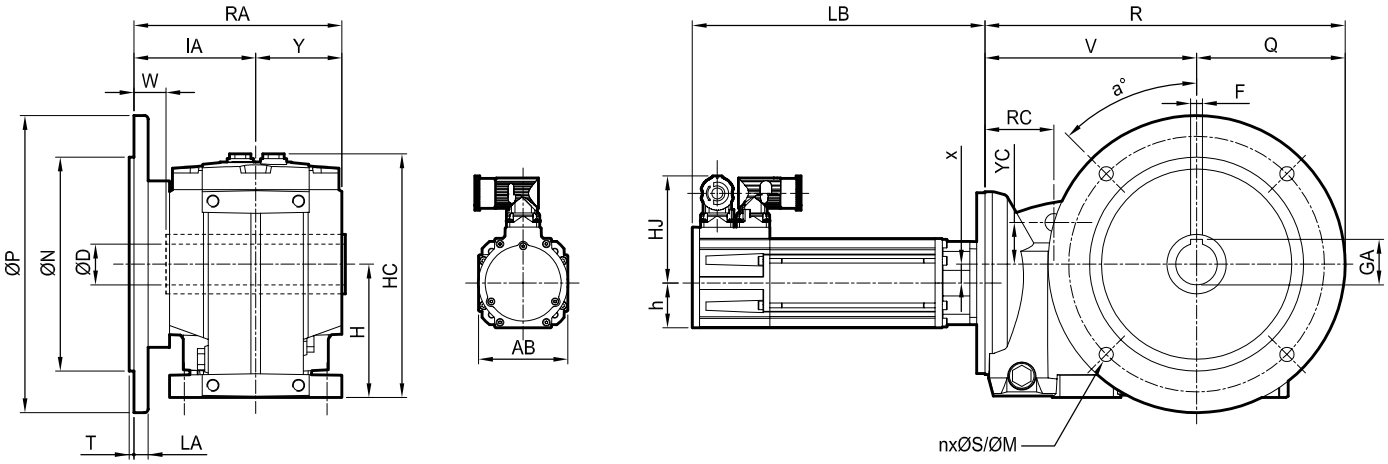

Type	Gearbox											Weight kg
	H	HC	IA	Q	R	RA	RC	V	x	Y	YC	
Ot 3132	80	174	89	82.5	248	149	69	165	46.5	60	66	15
Ot 3232	112	217	102.5	125	322	175	77	197	63	72.5	85	24
Ot 3233	112	205	102.5	100	303	235	58	178	16	72.5	35	22
Ot 3333	140	245	123	150	365	288	65	215	7	85	50	40
Ot 3433	180	306	131.5	175	411	335	59	236	30	103.5	60	66
Ot 3533	212	346	146.5	200	473	379	73	273	37	112.5	67	91

Type	BS flange								Hollow output shaft			
	M	N	P	LA	n	a	S	T	D	GA	F	W
Ot 3132	130	110	165	10	4	45°	9	3.5	30H7	33.3	8	24
Ot 3232	215	180	250	12	4	45°	12	4	35H7	38.3	10	27
Ot 3233	215	180	250	12	4	45°	12	4	35H7	38.3	10	27
Ot 3333	265	230	300	12	4	45°	14	4	40H7	43.3	12	36.5
Ot 3433	300	250	350	15	4	45°	18	4	50H7	53.8	14	18.5
Ot 3533	350	300	400	18	4	45°	18	5	60H7	64.4	18	24.5

Motor **type**	Brushless motors with or without brake									
	Unimotor fm					Unimotor fm with brake				
	AB	HJ	h	LB	Weight kg	AB	HJ	h	LB	Weight kg
075 U3 B	75	89	37.5	247	3.7	75	89	37	277	4.2
095 U3 B	90	94	45	267	5.8	90	94	48	297	6.4
115 U3 B	115	99	45	293	8.8	115	99	58	323	10
115 U3 D	115	99	57.5	354	12.6	115	99	58	384	13.8
142 U3 E	142	113	71	327	20.7	142	113	71	387	22.5
190 U3 D	190	158	95	321	28.8	190	158	95	411	33.3

STD BACKLASH

Ot Dynabloc - Right angle integrated mounting output shaft
MI Integrated Mounting, Ot 3132 to Ot 3533
Dimensions

BS flange
Solid shaft left L

Dimensions in mm

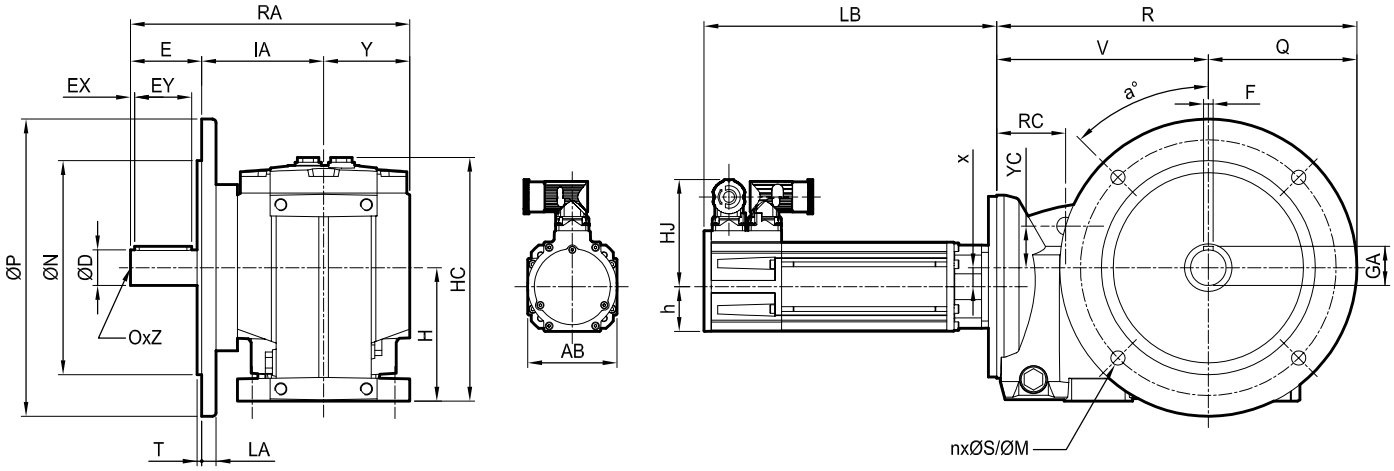

Type	Gearbox											Weight kg
	H	HC	IA	Q	R	RA	RC	V	x	Y	YC	
Ot 3132	80	174	89	82.5	248	199	69	165	46.5	60	66	15
Ot 3232	112	217	102.5	125	322	235	77	197	63	72.5	85	24
Ot 3233	112	205	102.5	125	303	235	58	178	16	72.5	35	22
Ot 3333	140	245	123	150	365	288	65	215	7	85	50	42
Ot 3433	180	306	131.5	175	411	335	59	236	30	103.5	60	68
Ot 3533	212	346	146.5	200	473	379	73	273	37	112.5	67	94

Type	BS flange								Solid output shaft							
	M	N	P	LA	n	a	S	T	D	E	EX	EY	F	GA	O	Z
Ot 3132	130	110	165	10	4	45°	9	3.5	25	50	3.5	40	8	28	M10	22
Ot 3232	215	180	250	12	4	45°	12	4	30	60	4	50	8	33	M10	22
Ot 3233	215	180	250	12	4	45°	12	4	30	60	4	50	8	33	M10	22
Ot 3333	265	230	300	12	4	45°	14	4	40	80	4	70	12	43	M16	36
Ot 3433	300	250	350	15	4	45°	18	4	50	100	5	90	14	53.5	M16	36
Ot 3533	350	300	400	18	4	45°	18	5	60	120	5	110	18	64	M20	42

Motor **type**	Brushless motors with or without brake									
	Unimotor fm					Unimotor fm with brake				
	AB	HJ	h	LB	Weight kg	AB	HJ	h	LB	Weight kg
075 U3 B	75	89	37.5	247	3.7	75	89	37	277	4.2
095 U3 B	90	94	45	267	5.8	90	94	48	297	6.4
115 U3 B	115	99	45	293	8.8	115	99	58	323	10
115 U3 D	115	99	57.5	354	12.6	115	99	58	384	13.8
142 U3 E	142	113	71	327	20.7	142	113	71	387	22.5
190 U3 D	190	158	95	321	28.8	190	158	95	411	33.3

Mb Dynabloc Servo gearbox
Right angle output shaft
General

Mb Dynabloc

• An economical worm solution for quiet operation

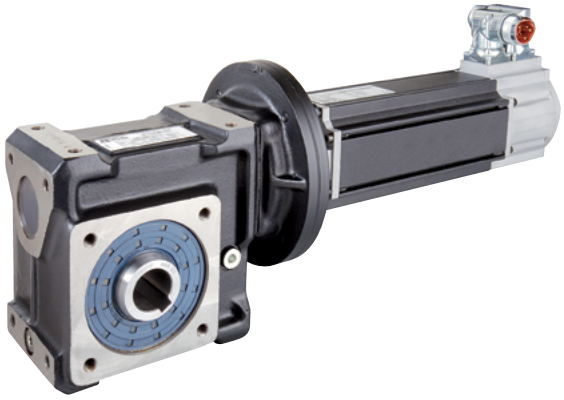

- **Compact size**
- **Space-saving right angle design**
- **Quiet operation**
- **Universal mounting**
- **Unimotor fm and hd**

Mb Dynabloc servo gearboxes are designed to reduce the speed and increase the torque of servo motors and to optimize the ratio of inertia between the driven load and the motor.

Mb Dynabloc worm gearboxes provide an economical solution with quiet operation. The gearboxes offer advantages in terms of space saving and ease of integration thanks to their compact size, right angle design and universal mounting.

The models Mb 4101 and Mb 4202 are fitted with compact **Unimotor hd** servo motors. All other Mb Dynabloc are fitted with **Unimotor fm** flexible servo motors making them ideal for continuous duty applications with high inertia loads. Standard motor size for D+20 lead time is 3000 rpm.

Description	
Range	8 sizes from 4101 to 2601
Gearbox ratio	Ratios from 5 to 276
Nominal torque	24 to 750 N.m
Backlash	STANDARD : 10 to 30′, depending on sizes and ratio
Lubrication	Life-lubricated with ISO 6743/6 synthetic oil, multiposition
Efficiency	Depending on ratios-see p.84 Technical Characteristics
Output shaft	Solid shaft + key - Tolerance of diameter: h6 - Key DIN 6883 Hollow shaft + key - Tolerance of diameter: H7 - Key DIN 6883
Unimotor fm Unimotor hd	Nominal speed 3000 rpm Connectors rotatable by 90° Incremental or absolute encoder Motor with or without brake Universal mounting with keyed shaft Unimotor hd: available for Mb41 and Mb42 gearboxes only
Finish	Painted (RAL 9005 black) (except Mb41, Mb42: unpainted aluminium)

Mb Dynabloc Servo gearbox
Technical characteristics

Gearbox type	Exact ratio	Efficiency	Angular backlash arcmin STANDARD	Max. radial load F_r at E/2 N	Max. axial load F_a N
Mb 4101	5	0.90	30	620	260
	7.5	0.89		700	355
	10	0.88		760	425
	15	0.84		835	560
	20	0.82		970	730
	25	0.79		1070	870
	30	0.76		1100	950
	40	0.72		1270	1140
Mb 3101	7.5	0.88	27	1160	580
	10	0.86	27	1200	600
	12.5	0.84	28	1200	600
	15	0.83	27	1210	605
	20	0.80	26	1570	785
	25	0.78	25	1850	925
	30	0.74	27	1690	845
Mb 2201	7.33	0.88	27	2070	1035
	10.3	0.86	25	2290	1145
	11.5	0.85	26	2320	1160
	15	0.84	25	2680	1340
	20	0.82	24	2800	1400
	25.5	0.79	23	3300	1650
	30	0.75	25	3430	1715
	40	0.70	24	3970	1985
	50	0.68	23	4480	2240
Mb 4202	24.69	0.89	30	2550	510
	31.15	0.89		2680	536
	34.58	0.89		2750	550
	40.50	0.87		2900	580
	44.96	0.87		2980	596
	49.38	0.85		3130	626
	62.31	0.85		3280	656
	69.17	0.85		3360	672
	81.00	0.83		3570	714
	93.46	0.79		3900	780
	103.75	0.79		4010	802
	124.62	0.77		4230	846
	138.33	0.77		4340	868
	155.77	0.76		4520	904
	186.92	0.72		4910	982
	207.50	0.72		5000	1000
	249.23	0.66		5000	1000
	276.67	0.66		5000	1000
Mb 2301	5.2	0.90	22	2560	1280
	7.5	0.88	22	2760	1380
	10.3	0.87	22	2940	1470
	11.5	0.85	23	3000	1500
	15	0.83	22	3120	1560
	20	0.82	20	3460	1730
	25.5	0.80	20	3950	1975
	30	0.75	22	4140	2070
	40	0.73	20	4610	2305
	50	0.69	20	5100	2550
	60	0.64	20	5700	2850
	80	0.61	19	6160	3080
	100	0.57	19	6950	3475
Mb 2401	7.25	0.89	21	2780	1390
	10.3	0.87	21	3280	1640
	14.5	0.85	21	3820	1910
	19.5	0.83	20	4440	2220
	25.5	0.81	19	4930	2465
	30	0.77	21	5110	2555
	40	0.75	20	5700	2850
	60	0.71	19	7150	3575
	80	0.65	18	7680	3840
Mb 2501	7.25	0.89	13	3530	1765
	10.3	0.88	13	3750	1875
	15.5	0.85	13	4510	2255
	20.5	0.84	12	5320	2660
	25.5	0.82	11	6110	3055
	30	0.79	13	6320	3160
	40	0.76	12	7350	3675
	50	0.73	11	7670	3835
	60	0.71	11	8460	4230
	80	0.65	11	9570	4785
	100	0.61	10	10920	5460
Mb 2601	7.5	0.97	12	4790	2395
	10.3	0.87	11	4810	2405
	15.5	0.85	11	4640	2320
	20.5	0.83	10	5150	2575
	25.5	0.82	10	6250	3125
	30	0.80	10	7440	3720
	40	0.75	10	7750	3875

STD BACKLASH

Mb Dynabloc Servo gearbox
Right angle output shaft
Mounting form - Operating positions

Mounting form

NU

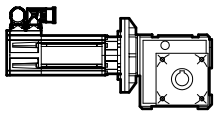

NU
Faces with tapped holes

Foots NS except Mb 3101

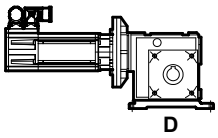

NS D
Foot mounted on D face

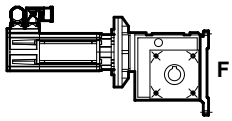

NS F
Foot mounted on F face

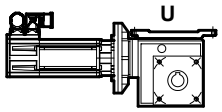

NS U
Foot mounted on U face

Flange

NS K
Foot kit

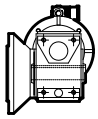

BS L-BD L-BN L
Flange to the left

*Other flange positions : to the right **R***

Output shaft

H
Hollow shaft

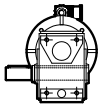

H L
Solid shaft left

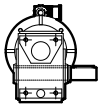

H R
Solid shaft right

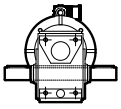

H LR
Solid shaft left and right

Option: torque ARM R (R)

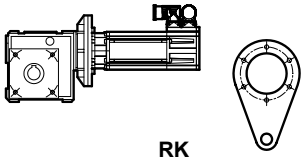

RK
Torque arm delivered as kit

Operating position

Mounting form NU, foot NSD, NSF, NSU, or torque arm R

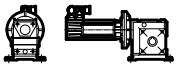

B3

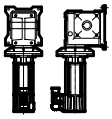

B6

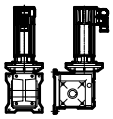

B7

B8

V5

V6

Flange form BS, BN or BD

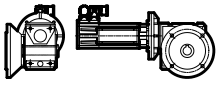

B5

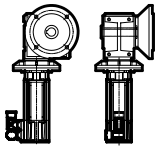

B52

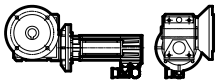

B53

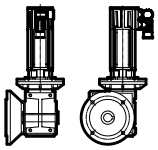

B54

V1

V3

Connector positions

A : STANDARD

B

C

D

STD BACKLASH

Mb Dynabloc Servo gearbox
Right angle output shaft
Ordering code information

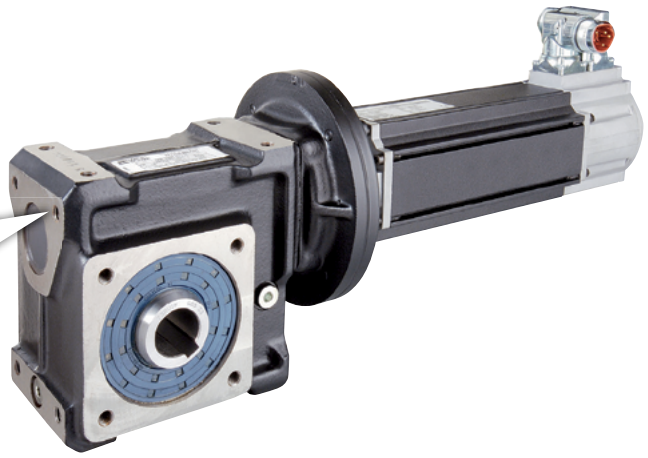

Gearbox

Mb	2401	V5	BS	L	H	40	MU-FF
Gearbox type	Size **4101, 3101, 4202, 2201, 2301, 2401, 2501, 2601**	Operating position **NU, NS: B3, B6, B7, B8, V5, V6** **Flange: B5, B52, B53, B54, V1, V3**	Mounting form **NU, RK, NS** **BS, BD, BN**	Mounting position **L, R**	Output shaft **H, HL, HR, HLR**	Exact ratio **5 to 276**	Motor input type **MU-FF**

Motor: Unimotor fm and hd (hd only Mb 41/42)

095	U3	B	30	0	B	A	CA	A
Unimotor fm **075, 095, 115, 142** Unimotor hd **055, 067**	Unimotor fm voltage* **U3** = 400 V Unimotor hd voltage **UD** = 400 V **ED** = 220 V	Stator length **A, B, C, D, E**	Nominal speed* **30** = 3000 rpm	Brake 24 V **0** = Without brake **5** = Parking brake	Connection type* **B** = Power and Signal 90° rotatable	Output shaft **A** = with key	Feedback device See Servo Drives and Motors technical catalogue	Inertia **A/C** = Standard **B/D** = High

**For the full range of motor options, please refer to the Servo Drives and Motors Technical Catalogue*

We reserve the right to modify the design, technical specifications and dimensions of the products shown in this document.
The description cannot in any way be considered contractual.

Mb 4101 - Mb 3101
Selection

Motor speed 3000 rpm

D+20 lead time (Ex Works)

Mb 4101 M_{Red-S1} 35 N.m max

Motor type	Motor nominal torque	Motor peak torque	Motor inertia	Gearbox inertia	Exact ratio	Output speed	S1		S5	
							Gearbox nominal torque	Duty factor	Acceleration torque at gearbox	Duty factor at acceleration
	$M_{n\,mot}$	$M_{peak\,mot}$	J_{mot}	J_{red}	I_{exact}	n_2	$M_{n\,red}$	k_{S1}	$M_{acc\,red}$	k_{acc}*
	N.m	N.m	10^{-4} kg.m^2	10^{-4} kg.m^2		rpm	N.m		N.m	
055 UD A 30	0.7	2.88	0.14	0.029	5	600	3.4	7.07	14.0	4.30
				0.023	7.5	400	5.1	5.50	21.0	3.34
				0.021	10	300	6.8	4.27	27.9	2.60
				0.019	15	200	10.2	3.04	41.9	1.85
				0.019	20	150	13.6	2.14	55.9	1.30
				0.019	25	120	17.0	1.65	69.8	1.00
				0.019	30	100	20.4	1.67	83.8	1.01
				0.018	40	75	27.2	1.14	111.7	0.69
055 UD B 30	1.05	4.72	0.25	0.029	5	600	5.1	4.71	22.9	2.62
				0.023	7.5	400	7.6	3.67	34.3	2.04
				0.021	10	300	10.2	2.85	45.8	1.58
				0.019	15	200	15.3	2.03	68.7	1.13
				0.019	20	150	20.4	1.42	91.6	0.79
				0.019	25	120	25.5	1.10	114.5	0.61
				0.019	30	100	30.6	1.11	137.4	0.62
055 UD C 30	1.48	6.6	0.36	0.029	5	600	7.2	3.34	32.0	1.87
				0.023	7.5	400	10.8	2.60	48.0	1.46
				0.021	10	300	14.4	2.02	64.0	1.13
				0.019	15	200	21.5	1.44	96.0	0.81
				0.019	20	150	28.7	1.01	128.0	0.57
067 UD B 30	2.45	7.65	0.53	0.029	5	600	11.9	2.02	37.1	1.62
				0.023	7.5	400	17.8	1.57	55.7	1.26
				0.021	10	300	23.8	1.22	74.2	0.98
067 UD C 30	3.5	11.1	0.75	0.029	5	600	17.0	1.41	53.8	1.11
				0.023	7.5	400	25.5	1.10	80.8	0.87

Mb 3101 M_{Red-S1} 60 N.m max

Motor type	Motor nominal torque	Motor peak torque	Motor inertia	Gearbox inertia	Exact ratio	Output speed	S1		S5	
							Gearbox nominal torque	Duty factor	Acceleration torque at gearbox	Duty factor at acceleration
	$M_{n\,mot}$	$M_{peak\,mot}$	J_{mot}	J_{red}	I_{exact}	n_2	$M_{n\,red}$	k_{S1}	$M_{acc\,red}$	k_{acc}*
	N.m	N.m	10^{-4} kg.m^2	10^{-4} kg.m^2		rpm	N.m		N.m	
075 U3 B 30	2.3	7	1.22	0.06	7.5	400	15.2	3.23	46.2	2.65
				0.05	10	300	19.8	2.69	60.2	2.21
				0.05	12.5	240	24.2	2.20	73.5	1.81
				0.04	15	200	28.6	1.93	87.2	1.59
				0.04	20	150	36.8	1.45	112.0	1.19
				0.04	25	120	44.9	1.09	136.5	0.90
				0.04	30	100	51.1	1.18	155.4	0.97

* If kacc < 1, the acceleration torque must be reduced by limiting the current through the drive.

STD BACKLASH

Mb 2201
Selection

Motor speed 3000 rpm

D+20 lead time (Ex Works)

Mb 2201 M_{Red-S1} **90 N.m max**

Motor type	Motor nominal torque	Motor peak torque	Motor inertia	Gearbox inertia	Exact ratio	Output speed	S1		S5	
							Gearbox nominal torque	Duty factor	Acceleration torque at gearbox	Duty factor at acceleration
	$M_{n\,mot}$	$M_{peak\,mot}$	J_{mot}	J_{red}	I_{exact}	n_2	$M_{n\,red}$	k_{S1}	$M_{acc\,red}$	k_{acc}*
	N.m	N.m	10^{-4} kg.m^2	10^{-4} kg.m^2		rpm	N.m		N.m	
075 U3 B 30	2.3	7	1.22	0.22	7.33	409	14.8	4.86	45.2	3.99
				0.15	11.5	261	22.5	3.60	68.4	2.96
				0.14	15	200	29.0	2.93	88.2	2.41
				0.1	20	150	37.7	2.37	114.8	1.94
				0.1	25.5	118	46.3	1.68	141.0	1.38
				0.1	30	100	51.8	1.64	157.5	1.35
				0.08	40	75	64.4	1.29	196.0	1.06
				0.07	50	60	78.2	1.08	238.0	0.89
095 U3 B 30	4.1	13.5	2.6	0.22	7.33	409	26.4	2.73	87.1	2.07
				0.15	10.3	291	36.3	2.14	119.6	1.63
				0.15	11.5	261	40.1	2.02	132.0	1.53
				0.14	15	200	51.7	1.64	170.1	1.25
				0.1	20	150	67.2	1.33	221.4	1.01

STD BACKLASH

* If kacc < 1, the acceleration torque must be reduced by limiting the current through the drive.

Mb 4202
Selection

Motor speed 3000 rpm

D+20 lead time (Ex Works)

Mb 4202 $M_{Red\text{-}S1}$ **135 N.m max**

Motor type	Motor nominal torque	Motor peak torque	Motor inertia	Gearbox inertia	Exact ratio	Output speed	S1		S5	
							Gearbox nominal torque	Duty factor	Acceleration torque at gearbox	Duty factor at acceleration
	$M_{n\,mot}$	$M_{peak\,mot}$	J_{mot}	J_{red}	I_{exact}	n_2	$M_{n\,red}$	k_{S1}	$M_{acc\,red}$	k_{acc}*
	N.m	N.m	10^{-4} kg.m^2	10^{-4} kg.m^2		rpm	N.m		N.m	
055 UD A 30	0.7	2.88	0.14	1,08	24.69	122	15.4	3.46	63.3	2.10
				0,82	31.15	96	19.4	3.46	79.8	2.10
				0,76	34.58	87	21.5	3.46	88.6	2.10
				0,80	40.50	74	24.7	3.07	101.5	1.87
				0,73	44.96	67	27.4	3.07	112.7	1.87
				1,02	49.38	61	29.4	2.60	120.9	1.58
				0,77	62.31	48	37.1	2.60	152.5	1.58
				0,70	69.17	43	41.2	2.60	169.3	1.58
				0,75	81.00	37	47.1	2.26	193.6	1.37
				0,77	93.46	32	51.7	1.77	212.6	1.08
				0,70	103.75	29	57.4	1.77	236.1	1.08
				0,74	124.62	24	67.2	1.64	276.4	0.99
				0,67	138.33	22	74.6	1.64	306.8	0.99
				0,73	155.77	19	82.9	1.47	340.9	0.90
				0,74	186.92	16	94.2	1.24	387.6	0.75
				0,67	207.50	14	104.6	1.24	430.3	0.75
				0,74	249.23	12	115.1	1.05	473.7	0.64
				0,67	276.67	11	127.8	1.05	525.9	0.64
055 UD B 30	1.05	4.72	0.25	1,08	24.69	122	23.1	2.31	103.7	1.28
				0,82	31.15	96	29.1	2.31	130.9	1.28
				0,76	34.58	87	32.3	2.31	145.3	1.28
				0,80	40.50	74	37.0	2.05	166.3	1.14
				0,73	44.96	67	41.1	2.05	184.6	1.14
				1,02	49.38	61	44.1	1.73	198.1	0.96
				0,77	62.31	48	55.6	1.73	250.0	0.96
				0,70	69.17	43	61.7	1.73	277.5	0.96
				0,75	81.00	37	70.6	1.51	317.3	0.84
				0,77	93.46	32	77.5	1.18	348.5	0.66
				0,70	103.75	29	86.1	1.18	386.9	0.66
				0,74	124.62	24	100.8	1.09	452.9	0.61
				0,67	138.33	22	111.8	1.09	502.7	0.61
055 UD C 30	1.48	6.6	0.36	1,08	24.69	122	32.5	1.64	145.0	0.92
				0,82	31.15	96	41.0	1.64	183.0	0.92
				0,76	34.58	87	45.5	1.64	203.1	0.92
				0,80	40.50	74	52.1	1.45	232.6	0.81
				0,73	44.96	67	57.9	1.45	258.2	0.81
				1,02	49.38	61	62.1	1.23	277.0	0.69
				0,77	62.31	48	78.4	1.23	349.6	0.69
				0,70	69.17	43	87.0	1.23	388.0	0.69
				0,75	81.00	37	99.5	1.07	443.7	0.60
067 UD B 30	2.45	7.65	0.53	1,08	24.69	122	53.8	1.00	168.1	0.79
				0,82	31.15	96	67.9	1.00	212.1	0.79
				0,76	34.58	87	75.4	1.00	235.4	0.79

STD BACKLASH

* If kacc < 1, the acceleration torque must be reduced by limiting the current through the drive.

Mb 2301 - Mb 2401
Selection

Motor speed 3000 rpm

D+20 lead time (Ex Works)

Mb 2301 M_{Red-S1} 150 N.m max

Motor type	Motor nominal torque	Motor peak torque	Motor inertia	Gearbox inertia	Exact ratio	Output speed	S1		S5	
							Gearbox nominal torque	Duty factor	Acceleration torque at gearbox	Duty factor at acceleration
	$M_{n\,mot}$	$M_{peak\,mot}$	J_{mot}	J_{red}	I_{exact}	n_2	$M_{n\,red}$	k_{S1}	$M_{acc\,red}$	k_{acc}*
	N.m	N.m	10^{-4} kg.m^2	10^{-4} kg.m^2		rpm	N.m		N.m	
075 U3 B 30	2.3	7	1.22	0.38	15	200	28.6	4.117	87.2	3.382
				0.31	20	150	37.7	3.702	114.8	3.041
				0.34	25.5	118	46.9	2.821	142.8	2.317
				0.34	30	100	51.8	2.610	157.5	2.144
				0.28	40	75	67.2	2.228	204.4	1.830
				0.26	50	60	79.4	1.830	241.5	1.503
				0.26	60	50	88.3	1.497	268.8	1.230
				0.26	80	38	112.2	1.270	341.6	1.043
				0.26	100	30	131.1	1.014	399.0	0.833
095 U3 B 30	4.1	13.5	2.6	0.53	7.5	400	27.1	4.585	89.1	3.481
				0.45	10.3	291	36.7	3.488	121.0	2.648
				0.45	11.5	261	40.1	3.349	132.0	2.543
				0.38	15	200	51.0	2.310	168.1	1.754
				0.31	20	150	67.2	2.077	221.4	1.577
				0.34	25.5	118	83.6	1.583	275.4	1.202
				0.34	30	100	92.3	1.464	303.8	1.112
				0.28	40	75	119.7	1.250	394.2	0.949
				0.26	50	60	141.5	1.026	465.8	0.779
115 U3 B 30	6.7	22.2	7.7	0.75	5.2	577	31.4	3.774	103.9	2.847
				0.53	7.5	400	44.2	2.806	146.5	2.117
				0.45	10.3	291	60.0	2.135	198.9	1.611
				0.45	11.5	261	65.5	2.050	217.0	1.546
				0.38	15	200	83.4	1.413	276.4	1.066
				0.31	20	150	109.9	1.271	364.1	0.959
115 U3 D 30	11.2	41	12.5	0.75	5.2	577	52.4	2.258	191.9	1.542
				0.53	7.5	400	73.9	1.678	270.6	1.146
				0.45	10.3	291	100.4	1.277	367.4	0.872
				0.45	11.5	261	109.5	1.226	400.8	0.837

Mb 2401 M_{Red-S1} 220 N.m max

Motor type	Motor nominal torque	Motor peak torque	Motor inertia	Gearbox inertia	Exact ratio	Output speed	S1		S5	
							Gearbox nominal torque	Duty factor	Acceleration torque at gearbox	Duty factor at acceleration
	$M_{n\,mot}$	$M_{peak\,mot}$	J_{mot}	J_{red}	I_{exact}	n_2	$M_{n\,red}$	k_{S1}	$M_{acc\,red}$	k_{acc}*
	N.m	N.m	10^{-4} kg.m^2	10^{-4} kg.m^2		rpm	N.m		N.m	
095 U3 B 30	4.1	13.5	2.6	0.69	14.5	207	50.5	3.78	166.4	2.87
				0.55	19.5	154	66.4	3.12	218.5	2.37
				0.59	25.5	118	84.7	2.31	278.8	1.75
				0.59	30	100	94.7	2.15	311.9	1.64
				0.5	40	75	121.4	1.80	399.6	1.37
				0.47	50	60	145.6	1.45	479.3	1.10
				0.47	60	50	167.3	1.21	550.8	0.92
				0.47	80	38	206.6	1.00	680.4	0.76
115 U3 B 30	6.7	22.2	7.7	0.9	7.25	414	43.2	3.97	143.2	3.00
				0.8	10.3	291	60.0	3.26	198.9	2.46
				0.69	14.5	207	82.6	2.32	273.6	1.75
				0.55	19.5	154	108.4	1.91	359.3	1.44
				0.59	25.5	118	138.4	1.41	458.5	1.07
				0.59	30	100	154.8	1.32	512.8	0.99
				0.5	40	75	198.3	1.10	657.1	0.83
115 U3 D 30	11.2	41	12.5	0.9	7.25	414	72.3	2.38	264.6	1.62
				0.8	10.3	291	100.4	1.95	367.4	1.33
				0.69	14.5	207	138.0	1.39	505.3	0.95
				0.55	19.5	154	181.3	1.14	663.6	0.78

* If kacc < 1, the acceleration torque must be reduced by limiting the current through the drive.

Mb 2501 - Mb 2601
Selection

Motor speed 3000 rpm

D+20 lead time (Ex Works)

Mb 2501 M_{Red-S1} 425 N.m max

Motor type	Motor nominal torque	Motor peak torque	Motor inertia	Gearbox inertia	Exact ratio	Output speed	S1		S5	
							Gearbox nominal torque	Duty factor	Acceleration torque at gearbox	Duty factor at acceleration
	$M_{n\,mot}$	$M_{peak\,mot}$	J_{mot}	J_{red}	I_{exact}	n_2	$M_{n\,red}$	k_{S1}	$M_{acc\,red}$	k_{acc}*
	N.m	N.m	10^{-4} kg.m^2	10^{-4} kg.m^2		rpm	N.m		N.m	
095 U3 B 30	4.1	13.5	2.6	2.6	25.5	118	85.7	4.95	282.3	3.76
				2.6	30	100	97.2	4.16	320.0	3.16
				1.9	40	75	124.6	3.32	410.4	2.52
				1.7	50	60	149.7	2.70	492.8	2.05
				1.7	60	50	174.7	2.27	575.1	1.72
				1.7	80	38	213.2	1.93	702.0	1.46
				1.7	100	30	250.1	1.46	823.5	1.11
115 U3 B 30	6.7	22.2	7.7	2.5	20.5	146	115.4	3.42	382.3	2.58
				2.6	25.5	118	140.1	3.03	464.2	2.28
				2.6	30	100	158.8	2.55	526.1	1.92
				1.9	40	75	203.7	2.03	674.9	1.53
				1.7	50	60	244.6	1.65	810.3	1.25
				1.7	60	50	285.4	1.39	945.7	1.05
				1.7	80	38	348.4	1.18	1154.4	0.89
115 U3 D 30	11.2	41	12.5	2.7	7.25	414	72.3	4.86	264.6	3.32
				2.65	10.3	291	101.5	3.84	371.6	2.62
				2.6	15.5	194	147.6	2.57	540.2	1.75
				2.5	20.5	146	192.9	2.04	706.0	1.40
				2.6	25.5	118	234.2	1.81	857.3	1.24
				2.6	30	100	265.4	1.52	971.7	1.04
				1.9	40	75	340.5	1.22	1246.4	0.83
142 U3 E 30	18.2	75	36.9	2.7	7.25	414	117.4	2.99	483.9	1.81
				2.65	10.3	291	165.0	2.36	679.8	1.43
				2.6	15.5	194	239.8	1.58	988.1	0.96
				2.5	20.5	146	313.4	1.26	1291.5	0.76
				2.6	25.5	118	380.6	1.11	1568.3	0.68

Mb 2601 M_{Red-S1} 755 N.m max

Motor type	Motor nominal torque	Motor peak torque	Motor inertia	Gearbox inertia	Exact ratio	Output speed	S1		S5	
							Gearbox nominal torque	Duty factor	Acceleration torque at gearbox	Duty factor at acceleration
	$M_{n\,mot}$	$M_{peak\,mot}$	J_{mot}	J_{red}	I_{exact}	n_2	$M_{n\,red}$	k_{S1}	$M_{acc\,red}$	k_{acc}*
	N.m	N.m	10^{-4} kg.m^2	10^{-4} kg.m^2		rpm	N.m		N.m	
142 U3 E 30	18.2	75	36.9	13	7.5	400	132.4	4.61	545.6	2.80
				8.5	10.3	291	163.1	4.21	672.1	2.56
				6.3	15.5	194	239.8	2.98	988.1	1.81
				3.5	20.5	146	309.7	2.32	1276.1	1.41
				3.4	25.5	118	380.6	1.84	1568.3	1.12
				3.35	30	100	436.8	1.46	1800.0	0.89
				3.3	40	75	546.0	1.38	2250.0	0.84

STD BACKLASH

* If kacc < 1, the acceleration torque must be reduced by limiting the current through the drive.

Mb Dynabloc - Right angle output shaft
MU-FF Universal Mounting Mb 4101, Mb 3101, Mb 4202, Mb 2201 to Mb 2601
Dimensions

NU Form
Solid shaft left HL

Dimensions in mm

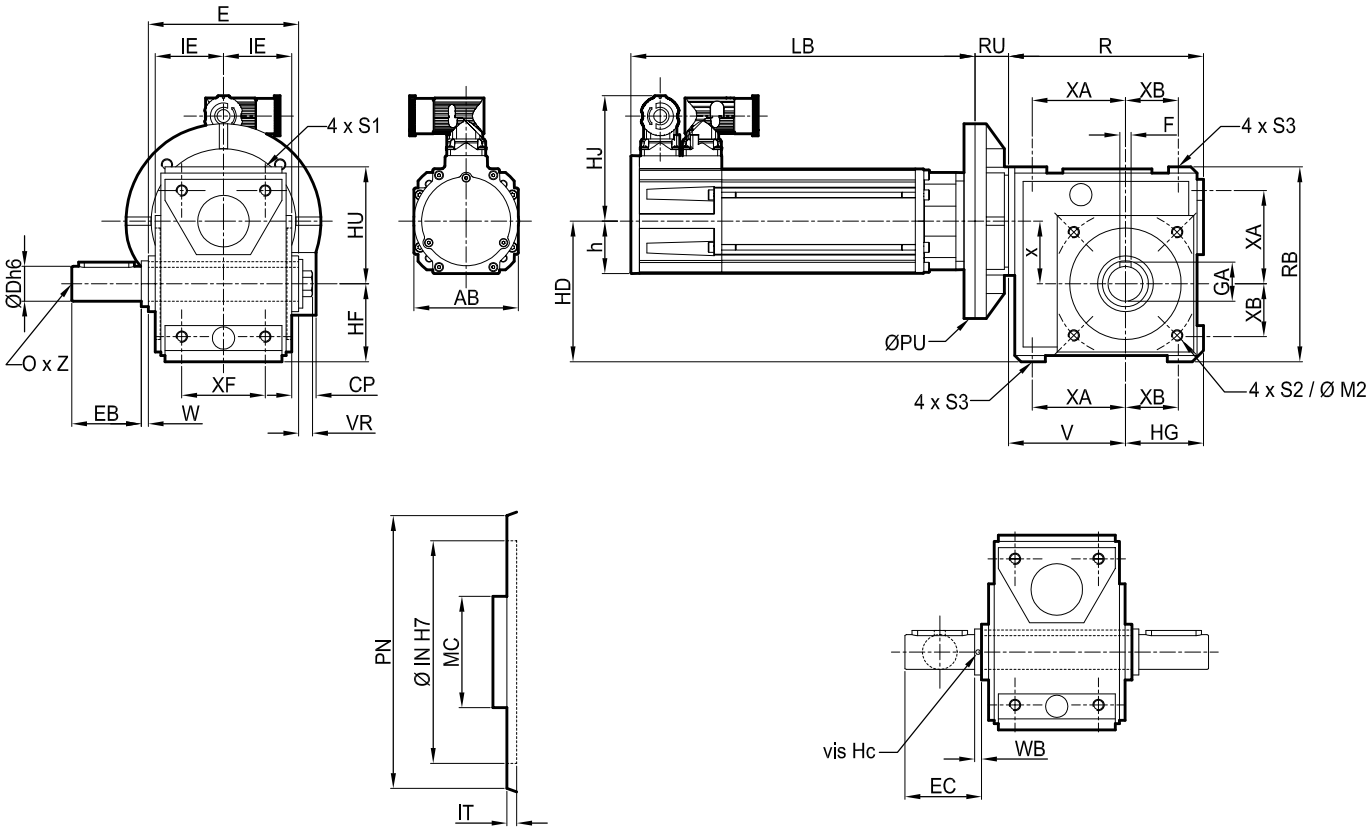

Type	Gearbox																	Weight kg	
	CP	E	HF	HG	HU	IE	M2	R	RB	S1	S2	S3	V	x	XA	XB	XF	HRorHL	H LR
Mb 4101	20	86	50	50	71.5	43	85	1001	121.5	6.5	M6x13	6.5	51	40	3	31.5	63	-	2.2
Mb 3101[2]	22.5	90	50	45	70	41	85	120	127	-	M8x12	M8x12	50	40	2	31.5	63	5.6	5.8
Mb 4202	23.5	130	63	63	63	75.5	95	181	126	M10x20	M10x15	M10x20	118	17	3	3	3	9.0	9.2
Mb 2201	23.5	108	56	56	84	49	105	140	140	M8x12	M8x12	M8x12	84	45	67	38	60	12.1	12.3
Mb 2301	22.5	118	63	63	97	54	115	160	160	M8x12	M8x12	M8x12	97	55	77	43	70	17	17.4
Mb 2401	28	138	75	75	115	64	130	190	190	M10x15	M10x15	M10x15	115	63	101	61	86	29.5	30
Mb 2501	28.5	168	90	90	135	78	180	225	225	M12x20	M12x20	M12x20	135	80	110	65	90	48	49.2
Mb 2601	33	188	100	100	160	93.5	1	260	260	M14x20	1	M14x20	160	100	125	65	100	54.3	55.9

1. Option BT on Mb 2601: M2 = 165, S2 = 6 x M10 x 15
2. Mb 3101: holes on F (S3) face on request, XA does not exist
3. Consult us

Type	Spigot on housing				Type	Solid output shaft										
	IN	IT	MC	PN		VR	vis HC	WB	D	EB	EC	F	GA	O	Z	W
Mb 4101	65	5	40	100	**Mb 4101**	-	-	-	20	45	45	6	22.5	M6	16	0
Mb 3101	68	3.5	40	80	**Mb 3101**	6.5	M5	8	20	40	45	6	22.5	M6	16	5
Mb 4202	75	5	45	124	**Mb 4202**	-	-	-	30[2]	60	-	8	33	M10	22	0
Mb 2201	80	3	40	98	**Mb 2201**	10	M5	8	25	50	55	8	28	M10	22	5
Mb 2301	95	3.5	60	114	**Mb 2301**	10	M5	8	30	60	65	8	33	M10	22	5
Mb 2401	110	3.5	60	132	**Mb 2401**	12	M5	8	35	70	75	10	38	M12	28	5
Mb 2501	140	4.5	90	166	**Mb 2501**	16	M5	8	45	90	95	14	48.5	M16	36	5
Mb 2601[1]	130[1]	4[1]	65	-	**Mb 2601**	16	M5	8	50	100	105	14	53.5	M16	36	5

1. Option on Mb 2601 : 186
2. Option on Mb 4202: diameter 25mm

Mb Dynabloc - Right angle output shaft
MU-FF Universal Mounting Mb 4101, Mb 3101, Mb 4202, Mb 2201 to Mb 2601
Dimensions

NU Form
Solid shaft left HL

Dimensions in mm

Motor type		Unimotor						
		Without brake		With brake				
		LB	Weight kg	LB	Weight kg	AB	HJ	h
Unimotor hd	055 UD A	118	1.2	158	1.6	55	72	27.5
	055 UD B	142	1.5	182	1.9	55	72	27.5
	055 UD C	166	1.8	206	2.2	55	72	27.5
	067 UD B	173	2.6	208	3.3	70	77	35
	067 UD C	203	3.2	238	3.9	70	77	35
Unimotor fm	075 U3 B	239	3.7	269	4.2	75	89	37.5
	095 U3 B	257	5.8	287	6.4	90	94	45
	115 U3 B	277	8.8	307	10	115	99	45
	115 U3 D	337	12.6	367	13.8	115	99	57.5
	142 U3 E	313	20.7	373	22.5	142	113	71

Type	Motors and gearboxes															
	4101		3101		4202		2201		2301		2401		2501		2601	
	RU	PU	RU	PU	RU	PU	RU	PU	RU	PU	RU	PU	RU	PU	RU	PU
055 UD	19	75	-	-	15	80	-	-	-	-	-	-	-	-	-	-
067 UD	19	90	-	-	15	90	-	-	-	-	-	-	-	-	-	-
075 U3	-	-	0	90	-	-	32	140	32	140	-	-	-	-	-	-
095 U3	-	-	-	-	-	-	33	120	36	120	50	120	50	120	-	-
115 U3	-	-	-	-	-	-	24	140	24	140	50	140	50	140	-	-
142 U3	-	-	-	-	-	-	-	-	31	200	50	200	50	200	59	200

STD BACKLASH

Mb Dynabloc - Right angle output shaft
MU-FF Universal Mounting Mb 4101, Mb 3101, Mb 4202, Mb 2201 to Mb 2601
Dimensions

BSL Flange Form (or without spigot BN flange)
Solid shaft left HL

Dimensions in mm

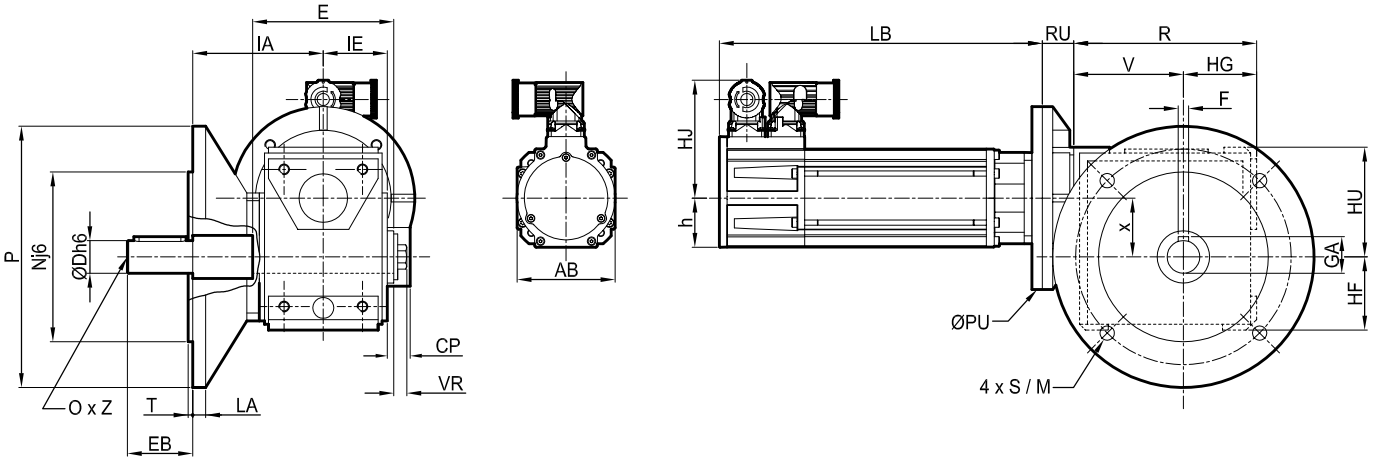

Type	Gearbox with BS or BN flange																Weight kg	
	CP	E	HF	HG	HU	IE	IA	R	V	x	M	N[1]	P	LA	S	T[1]	HR or HL	H LR
Mb 4101	20	86	50	50	71.5	43	77	101	75	40	100	80	120	8	7	-	-	2.5
Mb 3101[2]	22.5	90	50	50[2]	70	41	77	120[2]	75	40	100	-	120	7	7[3]	-	6.8	7
Mb 4202	23.5	130	63	63	63	75.5	80	181	118	17	130	110	160	9	9	3.5	9.2	9.4
Mb 2201	23.5	108	56	56	84	49	100	140	84	45	165	130	200	10	11	3.5	15.3	15.5
Mb 2301	22.5	118	63	63	97	54	106	160	97	55	165	130	200	10	11	3.5	20.4	20.8
Mb 2401	28	138	75	75	115	64	126	190	115	63	215	180	250	12	14	4	34.5	35
Mb 2501	28.5	168	90	90	135	78	126	225	135	80	265	230	300	12	14	4	54.1	55.3
Mb 2601	33	188	100	100	160	93.5	153	260	160	100	300	250	350	14	18	4	61.9	63.5

1. Flange without spigot: Nj6 = 0 and T = 0
2. Mb 3101: RU = 0
3. 4 radial holes

Type	Solid output shaft						
	VR	D	EB	F	GA	O	Z
Mb 4101	-	20	45	6	22.5	M6	15
Mb 3101	6.5	20	40	6	22.5	M6	16
Mb 4202	-	30[1]	60	8	33	M10	22
Mb 2201	10	25	50	8	28	M10	22
Mb 2301	10	30	60	8	33	M10	22
Mb 2401	12	35	70	10	38	M12	28
Mb 2501	16	45	90	14	48.5	M16	36
Mb 2601	16	50	100	14	53.5	M16	36

1. Option on Mb 4202: diameter 25mm

Mb Dynabloc - Right angle output shaft
MU-FF Universal Mounting Mb 4101, Mb 3101, Mb 4202, Mb 2201 to Mb 2601
Dimensions

NU Form
Solid shaft left HL

Dimensions in mm

Motor type		Unimotor						
		Without brake		With brake				
		LB	Weight kg	LB	Weight kg	AB	HJ	h
Unimotor hd	055 UD A	118	1.2	158	1.6	55	72	27.5
	055 UD B	142	1.5	182	1.9	55	72	27.5
	055 UD C	166	1.8	206	2.2	55	72	27.5
	067 UD B	173	2.6	208	3.3	70	77	35
	067 UD C	203	3.2	238	3.9	70	77	35
Unimotor fm	075 U3 B	239	3.7	269	4.2	75	89	37.5
	095 U3 B	257	5.8	287	6.4	90	94	45
	115 U3 B	277	8.8	307	10	115	99	45
	115 U3 D	337	12.6	367	13.8	115	99	57.5
	142 U3 E	313	20.7	373	22.5	142	113	71

Type	Motors and gearboxes															
	4101		3101		4202		2201		2301		2401		2501		2601	
	RU	PU	RU	PU	RU	PU	RU	PU	RU	PU	RU	PU	RU	PU	RU	PU
055 UD	19	75	0	90	15	80	32	140	32	140	-	-	-	-	-	-
067 UD	19	90	-	-	15	90	33	120	36	120	50	120	50	120	-	-
075 U3	-	-	0	90	-	-	32	140	32	140	-	-	-	-	-	-
095 U3	-	-	-	-	-	-	33	120	36	120	50	120	50	120	-	-
115 U3	-	-	-	-	-	-	24	140	24	140	50	140	50	140	-	-
142 U3	-	-	-	-	-	-	-	-	31	200	50	200	50	200	59	200

STD BACKLASH

Mb Dynabloc - Right angle output shaft
MU-FF Universal Mounting Mb 4101, Mb 3101, Mb 4202, Mb 2201 to Mb 2601
Dimensions

NU Form
Hollow shaft H

Dimensions in mm

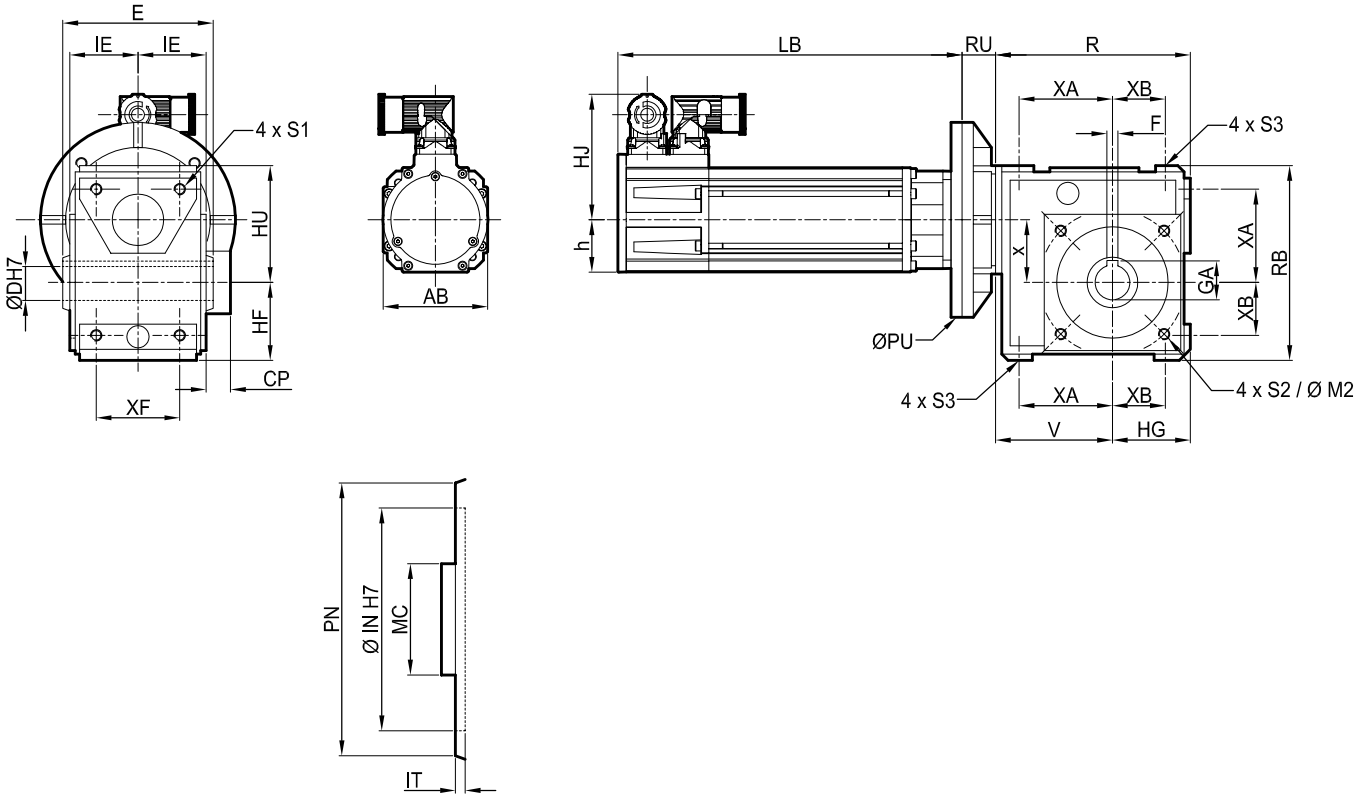

Type	NU gearbox																	Weight kg
	CP	E	HF	HG	HU	IE	M2	R	RB	S1	S2	S3	V	x	XA	XB	XF	
Mb 4101	20	86	50	50	71.5	43	85	101	122	6.5	M6x13	6.5	51	40	3	31.5	63	2.2
Mb 3101	22.5	90	50	50	70	41	85	120	120	-	M8x12	M8x12	50	40	2	31.5	63	5
Mb 4202	23.5	130	63	63	63	75.5	95	181	126	M10x20	M10x15	M10x20	50	118	3	3	3	9
Mb 2201	23.5	108	56	56	84	49	105	140	140	M8x12	M8x12	M8x12	84	45	67	38	60	11.5
Mb 2301	22.5	118	63	63	97	54	115	160	160	M8x12	M8x12	M8x12	97	55	77	43	70	16
Mb 2401	28	138	75	75	115	64	130	190	190	M10x15	M10x15	M10x15	115	63	101	61	86	28
Mb 2501	28.5	168	90	90	135	78	180	225	225	M12x20	M12x20	M12x20	135	80	110	65	90	45.5
Mb 2601	33	188	100	100	160	93.5	1	260	260	M14x20	1	M14x20	160	100	125	65	100	50.5

1. BT option on Mb 2601: M2 = 165, S2 = 6 x M10 x 15
2. Mb 3101: HG = 45 and RB = 127 (holes on F [S3] face on request, XA does not exist
3. Consult us

Type	Spigot on housing				Type	Hollow output shaft			
	IN	IT	MC	PN		D	E	F	GA
Mb 4101	65	5	40	100	**Mb 4101**	20	78	6	22.8
Mb 3101	68	3.5	40	80	**Mb 3101**	20	90	6	22.8
Mb 4202	75	5	45	124	**Mb 4202**	25[2]	130	8	28.3
Mb 2201	80	3	40	98	**Mb 2201**	25	108	8	28.3
Mb 2301	95	3.5	60	114	**Mb 2301**	30	118	8	33.3
Mb 2401	110	3.5	60	132	**Mb 2401**	35	138	10	38.3
Mb 2501	140	4.5	90	166	**Mb 2501**	45	168	14	48.8
Mb 2601	130[1]	3.5[1]	65	-	**Mb 2601**	50	188	14	53.8

1. Option on Mb 2601: 186
2. Option on Mb 4202: diameter 30 mm

Mb Dynabloc - Right angle output shaft
MU-FF Universal Mounting Mb 4101, Mb 3101, Mb 4202, Mb 2201 to Mb 2601
Dimensions

NU Form
Hollow shaft H

Dimensions in mm

Motor type		Unimotor						
		Without brake		With brake				
		LB	Weight kg	LB	Weight kg	AB	HJ	h
Unimotor hd	055 UD A	118	1.2	158	1.6	55	72	27.5
	055 UD B	142	1.5	182	1.9	55	72	27.5
	055 UD C	166	1.8	206	2.2	55	72	27.5
	067 UD B	173	2.6	208	3.3	70	77	35
	067 UD C	203	3.2	238	3.9	70	77	35
Unimotor fm	075 U3 B	239	3.7	269	4.2	75	89	37.5
	095 U3 B	257	5.8	287	6.4	90	94	45
	115 U3 B	277	8.8	307	10	115	99	45
	115 U3 D	337	12.6	367	13.8	115	99	57.5
	142 U3 E	313	20.7	373	22.5	142	113	71

Type	Motors and gearboxes															
	4101		3101		4202		2201		2301		2401		2501		2601	
	RU	PU	RU	PU	RU	PU	RU	PU	RU	PU	RU	PU	RU	PU	RU	PU
055 UD	19	75	0	90	15	80	32	140	32	140	-	-	-	-	-	-
067 UD	19	90	-	-	15	90	33	120	36	120	50	120	50	120	-	-
075 U3	-	-	0	90	-	-	32	140	32	140	-	-	-	-	-	-
095 U3	-	-	-	-	-	-	33	120	36	120	50	120	50	120	-	-
115 U3	-	-	-	-	-	-	24	140	24	140	50	140	50	140	-	-
142 U3	-	-	-	-	-	-	-	-	31	200	50	200	50	200	59	200

LEROY-SOMER™

www.leroy-somer.com

Connect with us at:

twitter.com/Leroy_Somer_en

facebook.com/leroysomer.nidec.en

youtube.com/user/LeroySomerOfficiel

linkedin.com/company/leroy-somer

Nidec

All for dreams

© 2018 Moteurs Leroy-Somer SAS. The information contained in this brochure is for guidance only and does not form part of any contract. The accuracy cannot be guaranteed as Moteurs Leroy-Somer SAS have an ongoing process of development and reserve the right to change the specification of their products without notice.

Moteurs Leroy-Somer SAS. Headquarters: Bd Marcellin Leroy, CS 10015, 16915 Angoulême Cedex 9, France. Share Capital: 65 800 512 €, RCS Angoulême 338 567 258.

5409 en - 2018.07 / g